NHS National Services Scotland

A Short Life Working Group(SLWG) was established to review and make recommendations for remobilisation, development of guidance and other related activities (e.g. training) with respect to ventilation (and associated aspects) within dental practices in relation to Covid-19. The contribution that factors play in mitigating the associated risk from Aerosol Generating Procedures(AGPs) were explored.

The SLWG had contributions from a variety of professional expert sources and wide representation from all four nations within the UK. The SLWG was co-chaired by Mr Ian Storrar, Head of Engineering from Health Facilities Scotland and Annette Rankin from Health Protection Scotland to whom particular thanks goes for their tireless professional efforts to drive this piece of work to a conclusion within such an ambitious time frame.

The document is written in SBAR format and included a rapid literature review, a critical appraisal of the fundamental requirements for ventilation as a control strategy along with other mitigating requirements and the modelling of the AGPs with reference to the site and surrounding area.

The document examines the current evidence base and is not intended as specific formal guidance in itself, rather it intended to provide recommendations to help inform future policy and the development of guidance. The Chief Dental Officers see this as ”a welcome addition to the information available on AGPs in the COVID period”.

The document is reproduced in full with the Frequently Asked Questions(FAQs) section duplicated and placed at the start for the convenience of the casual reader.

Please note that for absolute clarity that the fallow time remains for the moment 1 hour – the SBAR on ventilation is a technical review and will inform future policy regarding reducing fallow time.

Paul Cushley

Dental Director

National Services Scotland

COVID-19: Frequently Asked Questions (FAQs) for Dentistry

(the information can also be found at page 67)

This FAQ document has been developed to support Infection Prevention and Control and Clinical Teams during the COVID-19 Pandemic. Further information can be found in the UK COVID-19 IPC Guidance and National Infection Prevention and Control Manual. These FAQs are intended to clarify and support this guidance and have been compiled in response to queries received by the Scottish National ARHAI Team and Health Facilities Scotland. In particular support was requested for remobilisation of the dental practice sector following a reduction in service as a result of the COVID-19 pandemic. The FAQ are not intended to instruct colleagues how to operate dental practices but to address some common concerns and provide evidence based guidance/expert opinion to allow safe remobilisation of services. They are not intended to substitute for clinical judgement or standard operating procedures but may assist in informing those.

We understand that healthcare staff are faced with various guidance and publications from multiple sources. A recent letter issued by Chief Nursing Officer, Chief Medical Officer and National Clinical Director reinforces the need for healthcare staff to follow the guidance issued by Health Protection Scotland (HPS), Public Health England (PHE) and Scottish Government Health and Social Care Directorate (SGHSCD) in relation to Personal Protective Equipment (PPE) and Aerosol Generating Procedures (AGPs) which has national standing. The letter can be found at the following link;

https://www.gov.scot/publications/coronavirus-covid-19-letter-on-aerosol-generating-procedures-agp/

It should be noted that other devolved administration healthcare workers should follow their own national guidelines.

This FAQ attempts to address considerations to be taken into account both when working with suspected or confirmed cases of COVID-19 and when carrying out dental treatment on patients where COVID-19 is not suspected (and patients may have been tested and/or undergone a period of isolation before treatment) but COVID-19 is still widespread in the local community. This document will be updated as the evidence base develops and if there are any changes to published guidance. Please ensure that you are reading the most recent version. The evidence base is limited and where sufficient evidence for a definitive answer is not available these answers are necessarily based on the consensus of expert opinion. Additionally, there inevitably needs to be compromise between risk minimisation and practicability: The risks of transmission between individuals are mitigated but cannot be removed altogether.

How is COVID-19 transmitted?

Current evidence suggests that transmission of SARS-CoV-2 occurs primarily between people through direct, indirect, or close contact with infected people through infected secretions such as saliva and respiratory secretions, or through their respiratory droplets, which are expelled when an infected person coughs, sneezes, talks or sings.

Airborne transmission of the virus can occur in health care settings where specific medical procedures, called aerosol generating procedures (AGP's), generate very small droplets called aerosols. Some outbreak reports related to indoor crowded spaces have suggested the possibility of aerosol transmission, combined with droplet transmission, for example, during choir practice, in restaurants or in fitness classes.

Respiratory droplets from infected individuals can also land on objects, creating fomites (contaminated surfaces). As environmental contamination has been documented by many reports, it is likely that people can also be infected by touching these surfaces and touching their eyes, nose or mouth before cleaning their hands.

Based on what we currently know, transmission of COVID-19 is primarily occurring from people when they have symptoms, and can also occur just before they develop symptoms, when they are in close proximity to others for prolonged periods of time. While someone who never develops symptoms can also pass the virus to others, it is still not clear to what extent this occurs and more research is needed in this area. (WHO 2020)

Interrupting transmission of COVID-19 requires contact and droplet precautions to be applied. Airborne precautions must also be applied when undertaking and following an aerosol-generating procedure (AGP) or when working in a 'high risk' setting where AGPs are carried out routinely.

Time is required after an AGP is performed to allow the aerosols to be removed/diluted. This is referred to as the Post AGP Fallow Time (PAGPFT) and is a function of the room ventilation air change rate.

How should patients present for dental treatment?

Adopt a hierarchy of controls approach as follows;

1. For all symptomatic patients and those within 14 days' post isolation, treatment should be deferred unless a dental emergency
2. All other patients for whom an AGP is being undertaking follow respiratory precautions and other PPE requirements as per current protocols prescribed in 4 Nations Public Health guidance.
3. For patients not requiring an AGP follow respiratory precautions and other PPE requirements as per current protocols prescribed in 4 Nations Public Health guidance.

However, no patient should be refused treatment or discriminated against whatever their COVID19 status if they have a dental emergency.

How should patients be managed in the dental practice?

With some exceptions, as described below, patients should be managed as they would have been in the period before the COVID-19 pandemic. 'Social distancing' should be observed in reception and waiting areas, with a minimum distance of two metres maintained between patients. Patients should be encouraged to arrive at their exact appointment time to avoid an unnecessary stay in the waiting area. Patients should be required to wear a face covering when in these areas.

What infection prevention and control precautions need to be taken with patients presenting for dental treatment?

As with all patients, standard infection prevention and control precautions (SICPs) should be used at all times. Particular attention should be paid to hand hygiene before any patient contact.

In addition, patients need to be protected from the potential risk of infection from staff with unrecognised COVID-19 infection. All staff within two metres of a low risk patient should therefore wear a fluid-resistant surgical face mask to BS EN 14683.

Environmental decontamination: cleaning after each patient in this category should return to the practice in place before the COVID-19 pandemic

Fallow time: there is no requirement for any fallow time if there is no AGP undertaken on a patient.

Does the dental practice ventilation need to be altered in any way?

The first stage is to obtain some in-sight into the air changes that are happening in all the rooms of the dental practice but especially in the dental surgery where AGP's are occurring. The ventilation system should be set to provide the maximum amount of fresh air and the maximum number of air changes it is able to provide. Health Planning notes (such as SHPN 36 part 2 2006) recommend a minimum of 10 ACH for the dental surgery.

If there is no mechanical or natural (open window of suitable size) ventilation AGPs must not be undertaken in that room, as this will be in breach of both HASAW Act and maintain high concentrations of aerosolised upper respiratory tract secretions generated during the AGP.

For surgeries that have natural ventilation only and no immediate access to room data on ACH's. AGPs cannot be undertaken in these rooms until suitable ventilation rates are confirmed and a PAGPFT can be calculated. Depending on air circulation in treatment

rooms, it is expected that there will be some redistribution of small amounts of aerosol through closed doors into corridors and patient waiting/reception areas. The risk to patients and staff from these small volumes of aerosol out with the treatment room is estimated to be very low. This advice should be viewed as a short term (weeks) solution to assist with the provision of clinical dental services with a detailed plan to acquire a more detailed assessment of the practice ventilation facilities.

For surgeries that have mechanical ventilation and no immediate access to room data on ACH's AGPs cannot be undertaken in these rooms until suitable ventilation rates are confirmed and a PAGPFT can be calculated. This advice should be viewed as a short term (weeks) solution to assist with the provision of clinical dental services with a detailed plan to acquire a more detailed assessment of the practice ventilation facilities.

If you are unsure of the air changes and ventilation systems occurring in your dental practice, then you must seek advice.

There may be benefits in some cases in supplementing the ventilation to reduce the post AGP fallow time. Specialist advice can be procured to establish a feasible solution on a case-by-case basis.

Does the dental practice need to be altered or modified in any other way?

The priorities are to ensure that facilities are compliant with HASAW Act for the safety and comfort of all staff and patients and reduce the infection hazards from aerosols liberated during AGP's. It would be prudent to check that ventilation systems do not exhaust from treatment rooms into other areas of the practice, such as, waiting or staff rooms.

In line with standard best practice to facilitate ease of cleaning, the amount of equipment and material in the area should be kept to a minimum. Surfaces should be clutter free and items that may be needed should be stored away in closed cupboards or drawers in the surgery or ideally adjacent to the surgery to facilitate prompt access when they are required. In addition, alterations to facilitate social distancing, protective screening and one way systems may be required.

There may be benefits in some cases in supplementing the ventilation to reduce the post AGP fallow time. Specialist advice can be procured to establish a feasible solution on a case-by-case basis.

Is there a risk to patients or staff in waiting rooms, staff rooms or corridors outside the surgery during or after AGPs?

Dental surgeries should be operated with doors closed. Depending on air circulation patterns and air pressure in treatment rooms, it is expected that there may be some redistribution of small amounts of aerosol through doorframe gaps into corridors and patient waiting/reception areas. The risk to patients and staff from these very small volumes of

aerosol diluted with the air in the areas out with the treatment room is estimated to be very low.

What staff need to be in the dental room?

Only staff essential to treatment should be present in the room particularly if AGPs are being undertaken.

Are there any mitigating techniques which may reduce the PAGPFT?

Weak evidence exists that the use of high volume suctioning and/or rubber dams can reduce the volume of droplet/aerosols which are released into the room.

What cleaning is required after the procedure?

To minimise the risk from the environment, environmental decontamination should be undertaken after each patient has left.

The patient or staff are not required to sit in the surgery during the PAGPFT. Environmental surface decontamination should be systematic and documented to include all contact surfaces, including the dental chair. Cleaning and disinfectant chemicals and equipment that were previously used to clean the dental surgery between patients are sufficient.

Environmental decontamination should be thorough and include all contact surfaces, including the dental chair. Neutral detergent followed by a disinfectant containing 1000 parts per million (ppm) available chlorine (av cl) (or a combined detergent/disinfectant (1000 ppm av cl)) should be used following treatment of a patient in the amber or red pathway. Alternatively, consideration may be given to using 70% isopropyl alcohol for small surfaces. However, since alcohol is flammable its use as a surface disinfectant should be limited to small surface-areas and used in well-ventilated spaces only. Prolonged and repeated use of alcohol as a disinfectant can also cause discoloration, swelling, hardening and cracking of rubber and certain plastics.

As the droplet settling time is ten minutes: cleaning can commence within the area after ten minutes of the AGP completion, however the level of PPE required to undertake this depends on the risk assessment and calculated post AGP fallow time.

Manufacturer instructions and COSHH requirements should be followed with regard to the preparation of disinfectants and contact time required for effective disinfection with consideration given to the area where this product is reconstituted which should be well ventilated. Appropriate PPE should be worn when handling disinfectants.

Non-invasive patient care equipment should be single use disposable where possible. Re-useable (non-invasive) equipment must be disinfected after use using the products described above for environmental cleaning and in accordance with equipment manufacturers instructions.

Mop heads must be either single use disposable or reusable and laundered between uses as per manufacturer's instructions and National guidance.

How should instruments be transported and decontaminated after the procedure?

Instruments and other devices should be decontaminated in the normal manner in accordance with manufacturers' advice. Normal procedures should be designed to minimise the risk to staff from potentially contaminated instruments, so additional precautions should not be required.

What personal protective equipment (PPE) should be worn?

All staff in the dental practice should wear a minimum of a fluid resistant surgical mask for their entire shift, in line with the Chief Medical Officer's letter of 23 June 2020.

In addition, staff who may come within two metres of a patient at any time or cleaning equipment or furniture in the dental practice should also wear additional PPE as described for droplet precautions: I.e. disposable plastic apron, disposable gloves, and face/eye protection. Masks and face/eye protection may be worn on a sessional basis. Masks should be changed when they become wet, soiled or visibly contaminated, or if they are removed for any reason, for example when eating or drinking.

Staff who are within 2m of an aerosol generating procedure (AGP) (see below) should wear additional appropriate PPE: i.e. disposable fluid-repellent gown or coverall, disposable gloves, filtering face piece (FFP) respirator (instead of, **not** in addition to, the fluid resistant surgical mask) and face/eye protection. Staff must wear the FFP3 mask they have been fit tested for and fit check must be carried out each time a mask is worn. FFP respirators and face/eye protection may be worn on a sessional basis. FFP respirators should be changed when they become wet or soiled, or if they are removed for any reason. If the FFP respirator is valved, or not fluid-resistant, full face protection that covers the mouth as well as the eyes must be worn.

When, exactly, should AGP PPE be worn?

PPE as described above for staff in close proximity to an AGP should be worn by:

- Anyone carrying out or assisting with an AGP. The full list of AGPs is available in the relevant guidance document. AGPs typically carried out in a dental practice include
    - Dental procedures using high speed devices such as ultrasonic scalers and high speed drills or intra-oral use of compressed air as in triple syringe.
- Anyone else in the dental surgery who is, or is likely to come, within two metres of the AGP being carried out should wear an FFP3 respirator.

Are special donning and doffing areas required putting on and taking off PPE

No. However, while a special area is not required, facilities for hand washing and disposal of used PPE should be available in the vicinity of the area chosen and guidance on PPE donning, doffing and hand hygiene should be followed.

How long should a surgery be left for after an AGP?

The post AGP fallow time and thus the length of time for those requiring to wear FFP3 respirators following an AGP is dependent on the air changes. In smaller rooms and rooms with fewer air changes the effects of dilution and ventilation will be correspondingly lower; for example, in room with 2 air changes per hour (ACH) and an AGP of 10 minutes (with no mitigation), a minimum of two hours and twenty-seven minutes is considered pragmatic. This may mean that in some circumstances, for example a room with limited ventilation and little air changes, the practical option is for all staff to use FFP3 respirators at all times within the dental surgery. It would also potentially lead to long PAGPFTs unless mitigating or supplementary measures were put in place. No patients should be allowed in the room during the PAGPFT.

Is there a minimum post AGP fallow time?

The appropriate post AGP fallow time should be determined from the ventilation rate in the room and any additional mitigations. The fallow time should not be reduced below 10 minutes regardless of ventilation, as this is the time taken for larger droplets to settle out onto surfaces.

Are there mitigations that can be introduced to reduce the post AGP fallow time?

The amount of aerosol that is generated can be reduced by using high volume suction and dental dam with low volume suction. It is estimated that these actions could reduce the amount of aerosol generated by over 90%.

Addition of recirculating air cleaning devices could enhance the effective air change rate (but will not provide additional fresh air). The impact of such devices will depend on the specific device air flow rate and the size of the room. Devices should be correctly sized and the impacts on the room air flows considered. Recirculating air cleaning devices based on HEPA filter systems or UV-C are likely to be effective. Other technologies should be approached with caution as there is little evidence for effectiveness in practice.

How does practice in a multi chair clinic differ?

In multi-chair environments there may be logistical challenges when trying to control aerosols and link to treatment sessions that have different durations and complexities. Therefore, the most viable clinical option is a self-contained dental treatment units (pods).

These should conform to the following principles;

1. Obtain baseline data on room air changes, flow patterns and ventilation in/outputs, use of filters (size & maintenance record), options for natural ventilation. If there is no mechanical or natural (open window of suitable size) ventilation AGPs must not be undertaken in that room, as this will be in breach of both HASAW Act and maintain high concentrations of aerosolised upper respiratory tract secretions generated during the AGP.
2. Obtain location of nearby patient/staff areas that may be impacted directly/indirectly by AGP's and ventilation systems
3. There should be a minimum of 2 meters protected zone to contain the splatter and droplet between each unit. This protected zone can further be sub-divided into frequently contacted (hands) sites, that are decontaminated between patient treatments. The whole of the protected zone should be cleaned after a treatment session (e.g. at the end of the morning clinics or afternoon/evening clinics).
4. In addition to separation of the dental chairs (to a minimum of 2.0 metres) there should also be a physical barrier using for example Perspex screen (or other suitable materials) to contain splatter and droplets to the immediate vicinity of the dental chair. It is suggested that a minimum of 2.0m height above the AGP source be used as a guide for pod construction around the dental chair.
5. There is a need to measure the air change rate in the POS to calculate the PAGPFT.
6. There is a need to measure and analyse the air movement patterns in large clinic rooms as part of the building estates and facilities programme, ventilation properties of each room should be available for inspection.

Contributing partners

SBAR Ventilation, water and environmental cleaning in dental surgeries relating to COVID-19

Situation

There were a significant number of requests for assistance, advice and guidance with respect to dental practice ventilation and water management received by both National ARHAI Scotland (ARHAI) and Health Facilities Scotland (HFS). The other devolved administrations and Public Health England (PHE) also saw similar levels of enquiry on this and related topics. In particular support was requested for remobilisation of dental services following suspension of routine services as a result of the COVID-19 pandemic.

To gather as much subject matter expertise as possible, a Short Life Working Group (SLWG) was constituted and included all devolved administrations, representatives from Public Health England (PHE) and academia. A list of SLWG members is shown in Appendix 6.

The purpose of the short life working group was to review and make recommendations for remobilisation, development of guidance and other activities (e.g. training) with respect to ventilation (and associated aspects) within dental practices and treatment rooms in relation to COVID-19 based on the best available evidence and consensus expert opinion.

All supporting documentation is provided in the appendices.

Background

Dental practices ceased undertaking routine care following the lockdown imposed as a control measure for the COVID-19 pandemic. Whilst the evidence on the SARS-CoV-2 virus continues to emerge, it is recognised that aerosol generating procedures (AGPs) are considered to be a higher risk activity related to virus transmission and therefore require staff associated with the procedure to wear appropriate PPE. Many routine dental procedures involve the production of AGP's, including all high speed drilling and all ultrasonic tooth cleaning.

Remobilisation of services is now underway in an attempt to return to practice and minimise risk. The key area for consideration of the SLWG are ventilation, water and cleaning.

Assessment

Ventilation

The legal requirement to provide ventilation is contained within the Workplace (Health, Safety and Welfare) Regulations 1992 and in Northern Ireland, the Workplace (Health, Safety and Welfare) Regulations (Northern Ireland) 1993. In addition, the Scottish Building Technical Handbook (non-domestic) in Scotland and Approved Document F in England, Wales and Northern Ireland, the Building Regulations (Northern Ireland) 2012, Part K provide the regulations for the ventilation requirements to maintain indoor air quality in all workplaces.

The ventilation is important in any facility as it provides a means of bringing fresh air into a space to remove contaminants and permit a healthy working environment.

Ventilation can be provided by natural or mechanical means. Openable windows are the base form of natural ventilation. Mechanical ventilation is normally via ductwork and ceiling grilles; however, some surgeries may only have wall/window mounted fans.

There is a minimum requirement for fresh air this is recommended by CIBSE and the current Building Regulations (Part F) to be typically 10 l/s/person for most spaces. Healthcare ventilation guidance provides a further recommendation for the number of air changes per hour (ACH) in certain spaces within a healthcare environment (i.e. 10 ACH for a treatment room; guidance is provided in (S)HTM 03-01 and SHPN 36).

With respect specifically to COVID-19 the current assumed primary routes of transmission are direct exposure to respiratory droplets, and indirect exposure through contact with contaminated surfaces. Inhalation of smaller aerosol particles is also possible, particularly during or following an aerosol generating procedure (AGP).

The primary aim of building ventilation in COVID-19 risk reduction is to dilute any airborne virus in the form of aerosols to below a likely infectious dose. Ventilation systems should be run at their most effective/optimum volume/flow rate to maximise the dilution effect. Further information relating to general ventilation methods is given in Appendix 1.

During the course of the research, there was some evidence presented that the ventilation available in dental practices may not meet current legislation or guidance. It is therefore the aim of this paper to raise awareness of this potential and recommend there is a statement of intent to upgrade the ventilation in compliance with legislation and guidance.

AGPs in dentistry

There is a limited evidence base on SARS-CoV-2 infectivity in aerosols and in aerosols generated during dental AGPs to provide guidance with certainty.

Furthermore, robust data on the precise distribution of particle sizes which make up a dental aerosol produced during procedures such as high speed drilling or ultrasonic scaling are unavailable. It seems likely that a range of particle sizes will be produced similar to that used in other AGP settings, however there is very limited data on these.

Current evidence and expert opinion suggests that the highest level of infectivity probably lies in the droplet and splatter fraction generated during a dental AGP compared to the smaller particles less than 10µm in diameter that remain the airborne component of an AGP. Particles less than 1µm are unlikely to carry a large number of viruses and are thought to be a lower risk, given current evidence. The potential hazard for infection from droplets and splatter will be reduced by adherence to standard infection control precautions that are well rehearsed in dental practice i.e., appropriate PPE use, hand hygiene and environmental decontamination.

The hazard to dental healthcare workers from all size particles generated during AGP's is mitigated by use of respiratory PPE. Patients are not at risk from aerosols of their own respiratory secretions. Following the AGP there is a risk from the residual airborne aerosol to HCWs remaining or returning to the room (without PPE) or subsequent patients post AGP. The focus of this document is to minimise the risk to dental HCWs and subsequent patients from hazards associated with particles suspended in the air that may contain infectious virus. The approach to reducing this risk is by dilution of the aerosol cloud with fresh or decontaminated air. This is explored by modelling calculations and a number of engineering options to facilitate the air dilution process.

Further risk reduction measures for all airborne particle sizes are provided by use of rubber dams and high volume aspiration provided by dental chair units. There is very limited evidence to suggest that use of rubber dam may reduce bacterial air contamination by approximately 70% at 2 metres from the source.

The extent of this risk reduction has been estimated and a range of values used in modelling calculations. The group felt that mouthwashes were unlikely to offer a significant impact on risk reduction due to a washing out and dilution effect from a continuous flow of saliva. However, the impact of mouthwashes with a substantivity property were used in some model simulations, again with limited impact on risk mitigation.

Post aerosol generating procedure fallow time (PAGPFT)

The time period required following a procedure/AGP which requires air changes, cleaning and/or lying time to elapse is often referred to as "fallow time" A definition of PAGPFT is considered to be the time, post completion of the aerosol generating procedure, during which time larger droplets (10-100 µm) settle and aerosols disperse.

(<10 µm) are removed by dilution from ventilation air changes. Larger aerosols will also be lost via settling out over time, but at a lower rate than droplets. We recommend that the total PAGPFT is the time required to ensure removal of 99% of the aerosol fraction (< 10 µm) of particles. This is equivalent to removal of more than 99.99% (4 log10) of the total respirable particles (droplets and aerosols) released during the AGP (see annex 4).

Note: post completion of the AGP; **not** the end of the patient appointment time.

One of the most challenging areas for remobilisation of dental services is the required PAGPFT. If no AGPs are undertaken, then no additional time between patients is required, beyond that required for normal cleaning. PAGPFT is dependent on the air changes within the room in which the AGP was performed. The higher the air change rate the shorter PAGPFT required. A consensus droplet settling time was agreed at ten minutes based on a balance between clinical pragmatism, risk mitigation, calculations of particle behaviour and interpretation of current evidence. However, the time required to achieve 99% removal of aerosols following AGPs is determined mainly by the room's ventilation parameters.

Note: Cleaning of splatter and cleaning of droplets can commence during the PAGPFT, but only after the first 10 minutes to ensure droplet settling has taken place, i.e., wait 10 minutes following cessation of the AGP to undertake surgery environmental decontamination. During the PAGPFT PPE must be worn by any dental HCW in the room.

The relationship between air changes and clearance time is calculated from a ventilation flow equation as detailed in
Appendix 2. For a surgery with no additional mitigation measures the relationship between PAGPFT and air changes per hour is as given in Figure 1:

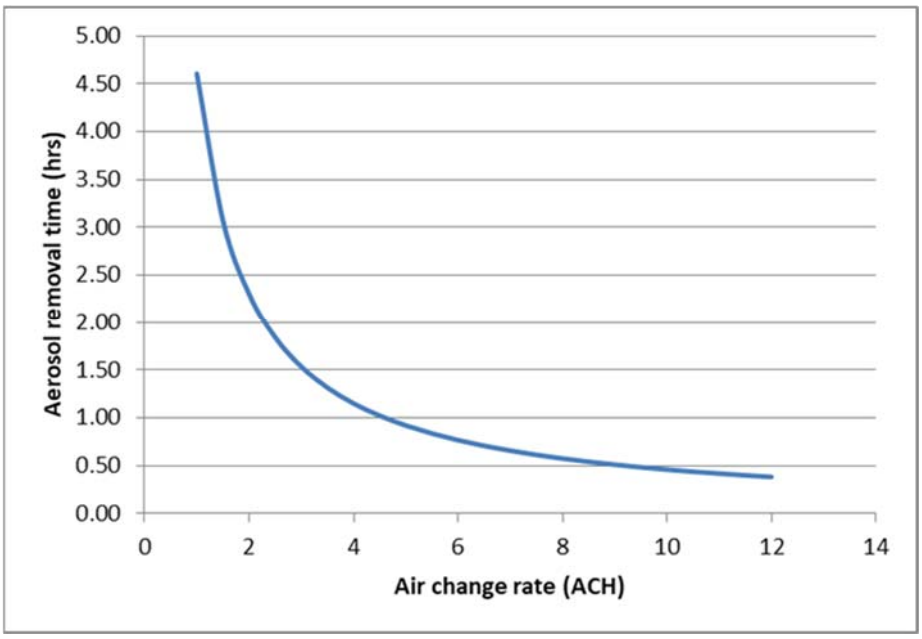

FIGURE 1: Relationship between time to remove 99% of aerosol with ventilation air change rate.

Note: aerosol removal time cannot be extrapolated from the graph shown in Figure 1 if there are no (zero) air changes. AGP's must not be performed in rooms with no mechanical or natural ventilation.

The PAGPFT can be reduced through the introduction of measures to reduce aerosol generation, improvement of the room ventilation system or through introduction of additional ventilation technologies such as local extract ventilation (LEV) devices or local recirculating air cleaning devices. The effectiveness of air cleaning devices will depend on the flow rate of the device, the efficiency of air cleaning and the size of the room. Other aspects which

should be considered are the noise of the equipment in operation and the efficiency of capturing particles close to the point of generation. Local air cleaning devices are typically recirculating units which enhance the effective air change rate by removing or inactivating airborne virus. Devices based on HEPA filtration and UVC are likely to be effective; other technologies should be treated with caution as there is little evidence for effectiveness in a real-world setting. Any introduction of such devices must consider cleaning, maintenance and safety. Tables setting out the relationship in Figure 1, together with estimated reductions in PAGPFT with the addition of mitigation measures are given in Appendix 2.

On completion of the AGP, and as the droplet settling time is 10 minutes, environmental decontamination can commence within the clinical area after 10 minutes of the AGP completion, however the level of PPE required to undertake this depends on the risk assessment and the calculated PAGPFT, as there may have been insufficient time to achieve the required dilution of airborne aerosol.

On completion of the AGP, and a droplet settling time of
10 minutes, cleaning can commence within the clinical area, however the level of PPE required to undertake this depends on the calculated PAGPFT as there may have been insufficient time to achieve the required dilution of airborne aerosol.

There are several gaps in the evidence base when determining a defined and appropriate PAGPFT for dental AGPs in the context of the COVID-19 pandemic, in particular the infective dose of COVID-19 from aerosolised upper respiratory tract secretions liberated during some forms of dental treatment. Furthermore, we have not attempted risk assessments at an individual or population level based on estimates of the COVID-19 epidemiology in the UK population, as this is expected to vary. We have therefore, taken a precautionary approach based on modelling scenarios balanced with expert opinion.

Practices will need to undertake a risk assessment for each room, priority given to those areas used for AGPs to determine the PAGPFT requirement. Knowledge of the ventilation air change rate is required to inform the risk assessment. Consideration should also be given to the ventilation intake and extract location, especially within small practices, to ensure that vented air containing AGP aerosols is not discharged into other areas posing risks to patients, staff or the general public.

Water

Dental Surgery Water

It is recommended that all dental practices and treatment rooms follow the requirements of existing legislation and guidance. There are not considered to be any additional COVID-19 risks associated with dental water systems.

The main legislation documents covering safe water management are:

- The Health and Safety at Work Act (HSWA)
- The Management of Health and Safety at Work Act (MHSWA)

- The Control of Substances Hazardous to Health Regulations (COSHH)
- HSE Approved Code of Practice (ACoP) L8 Legionnaires' disease - The control of legionella bacteria in water systems
- HSE Technical guidance HSG 274 Part 2 Legionnaires' disease - The control of legionella bacteria in hot and cold water systems

The main healthcare guidance documents are:

- SHTM 04-01 Water safety for healthcare premises
- SHPN 36 Part 2 NHS Dental Premises in Scotland
- HTM 01-05 Decontamination in primary care dental practices

PHE have also provided an information leaflet entitled Important information for dental practices: A safe water supply for your team and your patients"

There is also an advice sheet from ESGLI
https://www.escmid.org/research_projects/study_groups/legionella_infections/

It is a requirement that the employer appoints a person(s) responsible for managing health and safety and take responsibility for managing and documenting risks. This is normally a competent person with the knowledge, skills and experience to manage the health and safety, including control measures. This could be the owner or an employee or a third party. The documented water risk assessment should cover all aspects of the water system not just the dental lines (water storage, pipes, thermostatic mixing devices, hot and cold water temperatures, taps, showers, maintenance procedures, reviews, action plan, etc.).

HBN 01-05 notes (p39).

Note

In view of the expertise required in this specialised field, practices (through the Registered Manager) should engage with an external specialist to assist in meeting the recommendations given in Section 3 of this guidance. This may be a locally-based engineering consultant with specialist knowledge of *Legionella* and other water-borne organisms.

If the owner/operator decides to contact a third party to carry out the risk assessment, The Legionella Control Association provides a code of conduct for its members. In some areas it may be that the Boards/Trusts already undertake this role this as part of any existing SLA. It would be prudent for practitioners to liaise with their Health Boards/Dental Practice Advisor in the first instance if unsure of appropriate actions to take.

The risk of infection (legionella spp etc.) whilst small, must be managed and documented under the requirements of the legislation and guidance noted above.

If the general water outlets and dental lines have been left stagnant for a considerable period of time, they should be flushed at maximum flow for a period of not less than 5 minutes. It is good clinical practice to undertake this flushing period after a weekend of inactivity. There may be some splashing to floors and other surfaces which will required to be dried to avoid any slip risk to staff and patients.

Environmental decontamination

Prior to any dental treatment, surgery surfaces should be decluttered and where IT or communication systems are exposed to the clinical environment consider the use of covers and cleanable surface designs. To minimise the risk from the environment, environmental decontamination should be undertaken after each patient treatment has been completed, the patient has left the room and consideration given to the 10-minute drop-out time and PAGPFT.

Environmental decontamination should be systematic and consideration given to a check list that comprises cleaning frequently touched surfaces between each patient contact and a more widespread surgery clean at the end of each clinical session. This system will also facilitate auditing of cleaning processes in the dental practice.

Environmental decontamination should be thorough and include all contact surfaces, including the dental chair. Manufacturer instructions and COSHH requirements should be followed with regard to the preparation of cleaning/disinfectant agents and contact time required for effective disinfection with consideration given to the area where this product is reconstituted and should be well ventilated. Consider the use of packaged single-use impregnated wipes/cloths with detergents or disinfectants to facilitate environmental decontamination processes. Appropriate PPE should be worn when handling chemicals.

Non-invasive patient care equipment should be single use disposable where possible. Re-useable equipment must be decontaminated after use (including items such as goggles). All generic products described above for environmental cleaning and in accordance with equipment manufacturer instructions.

Mop heads must be either single use disposable or reusable and laundered between uses as per manufacturer’s instructions and National guidance.

Recommendations

As a result of the work of the short life working group, the following recommendations are made based on the available evidence:

1. Consider the hierarchy of controls when managing risks from the environment (air and water). This includes a risk assessment of all patients prior to treatment to assess signs and symptoms of respiratory tract infections and defer non-emergency treatment until a later date.
2. There is a statement of intent to upgrade the ventilation compliance with legislation and guidance.
3. Undertake a systematic review of the current ventilation processes throughout the dental practice. Key points to check in the short term are;
   A. The ventilation available in rooms undertaking AGPs (see FAQs).
   B. For surgeries that have no mechanical or natural ventilation. AGPs should not be undertaken. The suitability of other activities to take place in an unventilated room space should be reviewed in the context of Health and Safety at Work Legislation.
   C. For practices that have mechanical ventilation in surgeries where AGPs are undertaken, check and document that treatment room air is not recirculating untreated air back to the treatment room, patient waiting areas or staff rooms. Unless the ventilation is set up to give negative pressure in the surgery room, it is expected that there will be some redistribution of small amounts of aerosol through closed doors into corridors and patient waiting/reception areas. The risk to patients and staff from these small volumes of aerosol out with the treatment room is estimated to be very low. For detailed advice on air recirculation and air conditioning units see FAQs.
   D. For surgeries that have measured and recorded (see FAQs) the surgery ventilation rates (as ACH) assess and document the estimated PAGPFT required prior to restarting AGPs.
   E. For surgeries that have mechanical ventilation
   and no immediate access to room data on ACHs. AGP cannot be undertaken.
   F. For surgeries that have access to natural ventilation only and no immediate access to room data on ACHs a risk assessment should be carried out to assess suitability of area for carrying out AGPs. Depending on air circulation in treatment rooms, it is expected that there will be some redistribution of small amounts of aerosol through closed doors into corridors and patient waiting/reception areas. Based on current evidence, the risk to patients and staff from these small volumes of aerosol from the treatment room is estimated to be very low. This advice should be viewed as a short term (weeks) solution to assist with the provision of clinical dental services with a detailed plan to acquire a more detailed assessment of the practice ventilation facilities.
4. Follow the advice given in the “COVID-19 in dentistry FAQ”; initially detailed in Appendix 4 (please note these may be managed and updated elsewhere).
5. Dental practices should assess the estimated PAGPFT required prior to restarting AGPs

6. It is recommended that risk assessments for all other activities (such as PPE, social distancing, etc.) are continued until advised by CDO.
7. Professional advice should be sought if a practice wishes to modify the ventilation system to reduce PAGPFT.
8. As a result of evidence gaps identified in the rapid literature review the following additional research should be undertaken;
    - Infectivity of droplets and aerosols containing COVID-19
    - Time course of splatter, droplets and aerosol dispersion during AGP undertaken in dental surgeries
    - Establish an accurate percentage of practices/surgeries with “compliant” and “non-compliant” ventilation solutions.
    - The use and cost effectiveness of “air scrubbers”; ultra-violet systems and other technologies as effective disinfection methods and their ability to reduce the viral load within a space, specifically for disease risk within the dental environment.
    - The use and cost-effectiveness of AGP mitigation equipment and processes such as LEVs
9. Review of gaps in service provision linked to IP&C in the built environment for General Dental Practices (GDPs):

    - extant guidance and specifications for ventilation in dental surgeries has been widely available for over
    14 years (in Scotland since 2006 – SHPN 36 part 2), there has been a failure in the design and sign-off of dental surgery new builds across the dental workforce, there needs to be an understanding of the factors involved in this failure.
10. Any additional ventilation solutions should also refer to the National and local polices of carbon reduction.
11. Dental practice inspection schemes should be updated to assess compliance with building ventilation requirements in the context of Health and Safety at Work legislation
12. For Institutions with multiple chairs undertaking AGPs in a large single room set-up. These should be managed according to the following principles;
    a. Consider constructing dental AGP pods that ensure a physical spacing of at least 2 metres between each AGP source AND a method of physical segregation that provides at least a 2 metre barrier in the horizontal and vertical plains.
    b. Each pod should also accommodate an appropriately sized room recirculating air cleaner (HEPA Filter or Ultra Violet unit).
    c. Ventilation in the room that houses the pods should have a minimum of 6 ACH. Each pod should have adequate ventilation.

Appendices

Appendix 1 - Ventilation solutions

Appendix 2 - Fallow time tables for various air change rates and mitigation strategies.

Appendix 3 - Rapid review Dental aerosols – risk and mitigation measures:

Appendix 4 - FAQ

Appendix 5 - Info graphics

Appendix 6 - SLWG members

Appendix 1 – Ventilation solutions

Air change rate

The air change rate is the rate of ventilation for an area, normally expressed in 'air changes per hour' (ACH) i.e. the number of times per hour that the entire air volume of the area is changed. It is not sufficient to recirculate air in a room and there is a need to provide a quantity of “fresh air” to remove pollutants and contaminates (such as carbon dioxide).

Types of Ventilation

A wide range of ventilation system arrangements may exist across the many varying establishments. Generically they can be split into four different air exchange modes. Generic headings are used to highlight some of the systems which may exist.

Natural Ventilation

These are methods of ventilation which rely on wind power or convective movement of warm air.

- Openable windows will be the most common form of this.
- Adjustable vents in the window.
- Controllable vents to outside in the external wall

It is important to make sure that method of operation is understood and that the adjustable mechanisms to open the windows/vents are operational.

This form of ventilation can result in the pressure of the room, relative to the corridor, ranging from negative through neutral to positive.

Trickle ventilators (a small adjustable vent, normally in the head of a window frame) can provide a small amount of air but the resultant air change rates would be extremely low.

There may sometimes be a vent grille through inside walls to other internal spaces which are unpowered air transfer grilles, but do not constitute ventilation of the room on their own.

Mechanical Extract Ventilation

The principle here is that air will be pulled from the room by a fan to be exhausted to outside. In an extract only system, the air which replaces this will be pulled from another area. This would often utilise the vent grille from another internal space (mentioned above) to allow air make up.

This form of ventilation can result in the pressure of the room, relative to the corridor, that is negative.

Extract systems can exist in different formats examples of which are as follows.

- Window mounted fans
- Wall mounted fans (through external wall)
- Ducted fan with the fan in the room, air ducted to outside
- Ducted fan with a remote fan and the grille in the room

Due to the large variant that is possible, other arrangements may be found. It is important to make sure that the method of operating the fan is understood and that the fan is operational.

Mechanical Supply Ventilation

The principle here is that air will be pushed into the room by a fan from outside. In a supply only system, the air needs a means of escape to another area. This would often utilise the vent grille from another internal space (mentioned above) to allow air release.

This form of ventilation can result in the pressure of the room, relative to the corridor, that is positive.

Supply systems can exist in different formats examples of which are as follows.

- Window mounted fans
- Wall mounted fans (through external wall)
- Ducted fan with a remote fan and the grille in the room

Due to the large variant that is possible, other arrangements may be found. It is important to make sure that the method of operating the fan is understood and that fan is operational.

Mechanical Supply and Extract Ventilation

The principle here is that air from outside will be pushed into the room by a fan. The air is then pulled from the room by another fan which will discharge it to outside. A variant to this can be that only some of the air which is moved in the room is fresh air and the remainder is recirculated via a ductwork system using the same two fans.

This form of ventilation can result in the pressure of the room, relative to the corridor, ranging from negative through neutral to positive.

Supply and extract systems can exist in different formats examples of which are as follows.

- Window mounted fans, where two fans are mounted, each in a separate window. One fan set to extract and the other to supply.
- Wall mounted fans where two fans are mounted, each through an outside wall. One fan set to extract and the other to supply.
- Ducted supply and extract fans with remote fans and grilles in the room

Where the ductwork system is set to recirculate some of the room air, it would be advisable to seek expert assistance to establish whether the system can be run with no recirculation.

Due to the large variant that is possible, other arrangements may be found. It is important to make sure that the method of operating the fans is understood and that the fans are both operational.

Air Change Rate

The dilution of aerosols is impacted by the rate at which air is changed in the room. The higher the air change rate, the greater the dilution.

SHPN 36 Part 2 NHS Dental Premises in Scotland, includes a table with recommended air change rates for most of the room types which are likely to exist. For the dental treatment room this document recommends that 10 air changes per hour (ACH), supply and extract with neutral pressure is appropriate.

Natural ventilation will produce a variable air change rate. This can be very low (below 1 ACH) and if windows are fully open, the rate may be higher (studies of residential size spaces indicated results of between 0.45 & 1.9 ACH for a single window opening and 0.47 & 3.09 ACH for multiple window openings). The incoming air will, in most cases, be unheated therefore opening a window can have an impact on comfort, especially in the winter. The unpredictability of performance of natural ventilation tends to require more user interaction.

For the three generic mechanical ventilation types discussed above, it is likely that they will produce a more stable air change rate in the room. Some variation can occur in this where the wind pressure can have an impact on the performance of the fan. This wind phenomenon is particularly evident with window fans or those mounted into external walls. It should be possible to obtain advice from a ventilation specialist into the typical ACH which your system may achieve.

The window and wall mounted fans, and some ducted systems, do not incorporate a method of heating the incoming fresh air.

Operation and Maintenance of Ventilation Systems

It is important that the ventilation system is operational and functional. The dilution effect from the ventilation is a benefit in reducing the risks from COVID-19 or from aerosol/airborne pathogens.

Ventilation systems will reduce in efficacy over time. This is more pronounced where maintenance is not carried out. It is advisable to understand who is responsible for enabling regular maintenance and to seek assurance (plus keep accurate records) that this maintenance is taking place.

What is the difference between air-conditioning and ventilation?

Air-conditioning means 'treating' or 'conditioning' air – this is normally cooling it. Ventilation means the supply of air to a space. Ventilation can be 'natural' i.e. opening windows, or mechanical (using systems of ducts and fans to provide air to the building) or a combination of the two (for example an extract fan such as in a bathroom to remove 'waste' air with fresh air coming from openings in the building). In the context of COVID-19 we are particularly interested in ensuring an adequate rate of supply of fresh (outdoor) air to a space. This acts to dilute any virus particles in the space and remove them from the building and hence reduces risk of exposure to the airborne virus[1].

	Ventilation	**Air-Conditioning**
Purpose	Provide fresh air to a space	Regulate the temperature and humidity of air in a room
Individual room type	• System can sometimes operate in a mode where it mixes some of the air extracted from the space with the incoming fresh air • This recirculation function can be turned off but given mixing of air within a room occurs naturally anyway, and only uses air within that room, turning off these systems may not significantly reduce the risk of spread	• Effectively a single room recirculation system but one where air is sucked into a device to be heated or cooled and moisture removed if the humidity is too high, before the same air is then blown back into the room • Some level of filtration may also be included • Occupants can usually control these systems themselves with a panel on the wall

[1] Ventilation is a key precautionary measure in addition to the other key measures, including avoiding close contact, regular hand washing and maintaining good hygiene practices.

	Ventilation	Air-Conditioning
	• Turning off the recirculation function can lead to cold draughts; if these systems then get turned off completely by unhappy occupants, then the rate of supply of fresh air will decrease	
Centralised multi-room type	• System can sometimes operate in a mode where it mixes some of the air extracted from the space with the incoming fresh air • This recirculation function can be turned off from a central controller • This will reduce the risk of contaminated air from one space being supplied to another	• Heater/cooler/dehumidifier is integrated into the centralised multi-room ventilation system • Some level of filtration is usually included • Air supplied to rooms by a network of ducts is 'conditioned' before it reaches the occupied space • These systems are controlled by facilities managers and occupants cannot usually control them

Heating, ventilation and air-conditioning system (HVAC)

HVAC is a term used to describe a system that performs one or more of these functions (heating, ventilation and/or air conditioning). It is often used to describe a centralised system of air supply with heating, cooling and humidity control. Such a system may also have filtration incorporated as part of its normal operation. Centralised systems are often designed around one or more air handling units (AHU) that perform these functions.

Appendix 2: Fallow time for various ventilation rates and mitigation strategies

The following tables identify the relationship of the recommended time following the cessation of AGP and before anyone can enter the room without appropriate PPE.

To enable the benefit of procedural mitigating measures to be understood, separate tables are shown to indicate how they impact on the PAGPFT.

Air changes per hour (ACH) should be established for all mechanical ventilation systems. The air changes may require to be adjusted to reflect the efficiency of the use of the fresh air in purging the room of air (as dictated by the type of ventilation setup and as indicated in Appendix 1).

In rooms which are naturally ventilated (opening windows) the recommendation is that the notional air change rate (with the windows fully open) is generally assumed to be 1 ACH.

The following tables estimate the PAGPFT with ACH calculations assuming target value of 99% reduction in aerosol at 6 ACH with no mitigations. All other values are calculated relative to this value. Values smaller than 10 minutes have been adjusted to 10 minutes as this is the droplet settling time and hence the minimum PAGPFT.

Table 1: PAGPFT (minutes) with no mitigating measures

	Air change rate (ACH)								
Duration of AGP (min)	**1**	**2**	**3**	**4**	**5**	**6**	**8**	**10**	**12**
10	299	147	96	71	56	46	34	26	21
20	336	163	106	77	60	49	35	27	22
40	368	176	112	81	63	50	36	27	22

Table 2: PAGPFT (minutes) with use of rubber dental dam & low volume suction

	Air change rate (ACH)								
Duration of AGP (min)	**1**	**2**	**3**	**4**	**5**	**6**	**8**	**10**	**12**
10	227	111	72	53	42	34	24	19	15
20	263	127	82	59	46	37	26	20	16
40	296	140	88	63	48	38	27	20	16

Table 3: PAGPFT (minutes) with use of high volume suction

	Air change rate (ACH)								
Duration of AGP (min)	**1**	**2**	**3**	**4**	**5**	**6**	**8**	**10**	**12**
10	202	99	64	47	37	30	21	16	13
20	239	115	74	53	41	33	23	17	14
40	272	127	80	57	43	34	24	18	14

Table 4: PAGPFT (minutes) with use of dental dam and high volume suction

	Air change rate (ACH)								
Duration of AGP (min)	**1**	**2**	**3**	**4**	**5**	**6**	**8**	**10**	**12**
10	130	63	40	29	22	18	12	10*	10*
20	167	79	50	35	27	21	14	10*	10*
40	199	91	56	39	29	22	15	10*	10*

* 10 minutes is the recommended minimum time regardless of air change rate to allow larger droplets to settle

In Room Recirculating Air Cleaners ("air scrubbers")

Various forms of air scrubbing are available. The particular generic types which are considered in this guidance are in room, recirculating HEPA filter units and recirculating UV irradiation units.

It should be noted that these units do not provide fresh air into the space and careful selection of the unit is required to ensure they filter out the appropriate size of aerosol or particulate.

In each case the maintenance of the unit is important to maintain the performance.

To establish the potential efficacy of the unit in the room the following points must be assessed.

a. The maximum air flow rate through the unit which is compatible with the acceptable noise level from it.

b. The location of the unit in the room and its potential impact on its air cleaning efficacy.
c. The efficiency with which UV systems inactivate viruses similar to COVID-19

Some of the clean air output from these devices can recirculate directly back into the device's intake and not contribute to dilution in the wider room volume, for this reason it is recommended that the efficacy of the units is assumed as 0.5 (this should be checked for the equipment being proposed/used), hence that 50% of the flow rate is used to calculate the effective increase in ventilation flow rate, unless the device manufacturer has shown otherwise. This adjusted figure can be converted to an equivalent room air change rate (flow rate in m^3/hr divided by the internal room air volume in m^3 [room width x length x height]). Addition of the air change calculated for the air scrubber to the air change which is derived for the room fixed ventilation systems, will provide the revised figure to be used in Tables 1 to 4.

As an example:

For a room 3m x 4 m x 3m high the room volume is 36 m^3

If the fixed ventilation system provides 5 ACH the air flow is 180 m^3/hr (assuming ventilation efficiency factor is 1.0) for a 10 min AGP:

PAGPFT Table 1 = 56 minutes
PAGPFT Table 2 = 42 minutes
PAGPFT Table 3 = 37 minutes
PAGPFT Table 4 = 22 minutes

Scrubber unit introduced with a maximum acceptable air flow of 360 m^3/hr

Scrubber air flow corrected for air circulation efficiency = 0.5 x 360 = 180 m^3/h

Additional air change rate = 180/36 = 5 ACH

Total effective air change rate to use in Tables 1 to 4 = 5+5 = 10 ACH

Adjusted PAGPFT Table 1 = 26 minutes
Adjusted PAGPFT Table 2 = 19 minutes
Adjusted PAGPFT Table 3 = 16 minutes
Adjusted PAGPFT Table 4 = 10 minutes

Local extract ventilation (LEV) systems are available which typically utilise a capture hood which is placed near to the location where the aerosols are generated. These are not included in this guidance at this stage as further research is necessary to establish their feasibility.

PAGPFT Calculation Methodology

The values in tables 1 to 4 are based on a single-zone viral aerosol model. During the AGP it is assumed that saliva and other respiratory fluids are aerosolised, with fluid generation rate of *z* ml/min. This fluid contains virus with a concentration ϕ virus/ml. We assume that a proportion of the saliva, *x* is aerosolised as small aerosols (< 10 µm) that remain airborne and are removed solely by the ventilation, while the remainder (*1-x*) is in large droplets (>10 µm) that will settle on surfaces.

A number of actions are considered to prevent aerosol and droplet release. These are represented in terms of the fraction of aerosol remaining and are assumed to apply equally to both droplet and aerosol fractions. Measures include the fraction of saliva removed by high volume suction d_s and the reduction of aerosol generated by using a rubber dental dam in conjunction with low volume suction, d_d. The rate of contamination of the air by infectious virus, w_a (virus/hr) is given as

$$w_a = 60 * z\emptyset x(1 - d_s)(1 - d_{d)}$$

The model considers a single chair dental surgery with a floor area, *A* (m^2) and a ceiling height, *H* (m). The room has volume, *V* (m^3) and is ventilated at an air change rate *N* (ACH). The ventilation volume flow rate is given by *Q* = *NV* (m^3/hr). Environmental mitigations focus on engineering solutions that can remove aerosol at a higher rate from the room which would increase this effective ventilation rate.

It should be noted that all the calculations assume a ventilation efficiency of 1 (fully mixed). Many ventilation systems are not this efficient and hence would remove air at a lower rate than expected. This can be incorporated by adjusting the ventilation air change rate by an efficiency factor *k*, as detailed in table 5 below.

The AGP has a duration t_{AGP} (min) and the concentration of infectious virus in the room air is assumed to be zero at the outset. The peak concentration at the end of the AGP is given by:

$$C_{max} = \frac{w_a}{Q}(1 - e^{-Nt_{AGP}})$$

The concentration with time, t, following the end of the AGP is then given by

$$C(t) = C_{max}e^{-Nt}$$

To compare the effect of different mitigations, the concentration following 99% removal at 6 ACH following a 10 minute AGP with no mitigations was calculated from

$$C_{99} = (1 - 0.99)\frac{w_a}{Q}\left(1 - e^{-6*10/60}\right)$$

And hence the time to achieve the equivalent concentration for a scenario with mitigations is calculated from

$$t_{99eq} = \frac{1}{N} ln\left(\frac{C_{99}}{C_{max}}\right)$$

Within tables 1- 4 it is assumed that dental dam with low volume suction reduces aerosol generation by 70%, high volume suction reduces generation by 80%, and application of both together has a combined reduction of 94%. These values are relatively conservative estimates based on published data from the rapid review.

Table 5: Ventilation air distribution effectiveness (adapted from ASHRAE standard 6.2)

Configuration	*K*
Ceiling supply of cool air Ceiling supply of warm air with low level return Low level supply of cool air and ceiling return Low level supply of warm air and low level return	1.0
Ceiling supply of cool air and ceiling return	0.8
Floor supply of warm air and ceiling return	0.7
Make up supply drawn from the opposite side of the room from the exhaust and/or return	0.8
Make up supply drawn in near to the exhaust and/or return location	0.5

Appendix 3: Rapid Review: Dental aerosols – risk and mitigation measures

Contents

1. Aim 31
2. Background 31
3. Objectives 32
4. Methodology 33
5. Results 33
6. Conclusions 59
Appendix A: Search strategy 60
References 62

1. Aim

To provide a rapid review of the scientific evidence base to inform the infection control measures required to facilitate safe re-establishment of general dental services following the COVID-19 pandemic lockdown, specifically in relation to the performance of aerosol generating procedures (AGPs) and associated ventilation considerations.

2. Background

The World Health Organization (WHO) defines an AGP as those procedures which result in the production of airborne particles (aerosols).[1] Particles which they describe as being <5 micrometres (µm) in size and as such can remain suspended in the air, travel over a distance and have the potential to cause infection if inhaled.[1] These particles are created by air currents moving over the surface of a film of liquid, the faster the air, the smaller the particles produced.[1] The range of particle sizes in a potentially infectious aerosol depends on a number of factors including, but not limited to, the mechanism of aerosol generation and the liquid content and viscosity of the aerosolized fluid.[2] The liquid content of the particle also influences the extent to which particle size reduces with evaporation.[2]

More recently, concerns over the potential for aerosols to facilitate transmission of SARS-CoV-2 has been raised.[3] This has resulted in an updated scientific briefing from WHO on this route of transmission which outlines that transmission of SARS-CoV-2 occurs primarily via direct, indirect or close contact with infected people through saliva and respiratory secretions but that recent reports highlight some evidence of aerosol transmission, combined with droplet transmission in enclosed crowded public spaces with poor ventilation.[4]

There is general consensus that certain dental procedures such as ultrasonic scaling and high speed drilling produce bioaerosols. Air and water ejected at high speeds from the devices used, mix with patients' saliva and blood, generating a fine mist of both droplet and aerosol particles. Droplets are defined as being >5-10µm in diameter and are expected to fall out rapidly within a metre from the source whereas aerosols are smaller, can be inhaled and remain suspended in air for longer periods.[1] Viral replication of COVID-19 has been proven to occur in the respiratory tract[5] with virus having been detected in saliva.[6] Aerosolisation of saliva and respiratory secretions during dental AGPs could be a potential

transmission route for COVID-19.[7] Dental procedures currently classified as AGPs include high speed drilling and ultrasonic scaling with debate surrounding the use of 3 in 1 air/water syringes and procedures which may induce coughing such as taking impressions or intra-oral radiographs.[8-11]

Remobilisation of UK dental services following the COVID-19 pandemic lockdown will involve a gradual return to business as usual. Performance of AGPs is not currently recommended within general dental practice but undertaken at emergency dental hubs. With rapidly changing pictures in the epidemiology of infection in UK communities and reports of asymptomatic/pre-symptomatic transmission, enhanced infection prevention and control measures in addition to standard infection control precautions (SICPs) are required to reduce the COVID-19 infection risk associated with dental aerosols generated during some forms of dental treatment, as they are incorporated back into routine dental care.

In regards to dental practice structure, in 2010, a survey of 179 Scottish dental surgeries revealed that 55% were located in converted residential premises. Median number of rooms in the practices were 8 (2-21) and median number of surgeries present was 3 (range 1-6). The average treatment area room size was 15.8 m^2 (range 7.3-23.9) and in terms of mechanical ventilation, 18% of surgeries had ventilation for the patient treatment waiting area, 19% for the patient treatment area and 19% for the instrument decontamination area.[12] It is clear that the layout of general dental practices across the UK is likely to vary significantly. It also anticipated that many dentists may be unaware of their current ventilation environment with a large proportion not knowing their treatment room's air change rate. Although there are a number of legislative requirements linked to building ventilation (such as Health and Safety at Work etc Act 1974) and building standards it was not part of the remit of this rapid literature review to explore the legislative background or evidence base surrounding building planning notes.

UK COVID-19 infection control guidance outlines that the time needed for clearance of infectious viral particles, after a particular dental procedure, depends on ventilation, the air change rate, the type of procedure being carried out, the use of high volume aspiration, the use of rubber dam, the duration of aerosol generation and the size and shape of the room.[11]

3. Objectives

This rapid review assessed the following research questions:

1. Is there evidence of dental staff acquiring respiratory infection from patients as a result of aerosol generating procedures performed?
2. What distances from (and times following) aerosol generating procedures have been associated with transmission of influenza, SARS, MERS or COVID-19?
3. What are the effects of dental dam, suctioning and other interventions on dental aerosol generation, content and/or dissemination?
4. What distances are reached by infectious viral aerosols during dental treatment?
5. What aerosol infection control measures have other countries employed to aid in re-establishment of dental services during the COVID-19 pandemic and is there evidence of their efficacy?
6. How long does it take for dental infectious viral aerosols to disperse/fall out following dental aerosol generating procedures and how does ventilation/air change rate affect this process?
7. What particle sizes are produced during dental aerosol generating procedures?

4. Methodology

A single person rapid review of the literature was undertaken using a tailored search strategy (Appendix 1). Academic databases were searched on 17th June 2020 to identify relevant literature and additional hand searching was conducted.

As this was a rapid review, evidence was critiqued but not formally graded with the use of an appraisal tool.

5. Results

5.1 Aerosol generating procedures (AGPs) in the health and care setting

The scientific literature does not provide conclusive evidence of COVID-19, SARS or MERS transmission as a result of aerosols created during specific medical procedures and no evidence of transmission in association with dental treatment.[13] An AGP rapid review recently conducted by Health Protection Scotland identified four case reports where patient-to-healthcare worker (HCW) transmissions of MERS, Severe Fever with Thrombocytopenia Syndrome Virus (SFTFV), Crimean–Congo haemorrhagic fever (CCHF) and SARS were described, however, their links to aerosol derived transmission are weak.[13]

In three of these case reports the infected HCWs were those who were performing the AGP.[13] In the fourth report by *Pshenichnaya et al*. (2015), authors describe the probable transmission of CCHF virus to 8 HCWs whilst caring for an infected patient.[14] The patient was ventilated in a neutral pressure side room.[14] All staff who had contact with the patient wore gloves, surgical masks and gowns.[14] Six HCWs had contact with the patient's blood or body fluids, however, two staff were reported to have had no direct or indirect contact with the body or fluids of the patient.[14] This study provides very weak evidence of aerosol transmission to these two HCWs through their being in the room whilst the patient was ventilated. The authors highlight that the two HCWs that had no direct contact with the patient, were present during high risk procedures, however, the report does not outline these specific procedures. Although both cases had no direct contact with the patient, presumably they had some minimal contact with the patient's environment e.g. door handles, however this is not highlighted as a risk by the authors. The authors also do not provide detail on the distances that these 2 HCWs were from the patient but do highlight that one was in the patient environment for 20 minutes and the other for only 10 minutes.[14]

A systematic review conducted by Tran et al in 2012 aimed to identify the levels of SARS transmission risk associated with specific AGPs through meta-analysis of five case-control and five cohort studies.[15] Dental procedures did not feature in their analysis, however, findings concerning the suctioning of body fluids could have relevance for dental practice. The review found, based on one case-control study, that suctioning of body fluids was not significantly associated with an increased risk of transmission, odds ratio 1.0 (CI 0.4, 2.8), however, the study used does not specify whether this refers to airway or oral suctioning.[15] In contrast, the authors suggest that based on two cohort studies, suctioning before intubation and suctioning after intubation might be associated with an increased risk of transmission, but the odds ratios were not statistically significant.[15] Suctioning before intubation and after intubation is outlined in reference to *Loeb et al's* 2004 paper and *Raboud et al's* 2010 paper. *Loeb et al's* refer to 'suctioning of endotracheal tubes', 'suctioning before intubation' and 'suctioning after intubation' but give no further explanations.[15] Raboud et al refer to 'suctioning' which they classify as an 'airway management procedure', 'suctioning before intubation' and 'suctioning after intubation'.[15] In conclusion, in the literature, analysis of airway suctioning, as a high risk AGP, cannot be easily separated from intubation and/or ventilation. Indeed, *Chung et al* (2015) provide an explanation as to why open respiratory tract suctioning may increase levels of airborne

microorganisms in this scenario: *"Before performing open suctioning, the endotracheal tube must be disconnected from a ventilator circuit. A few phenomena are observable while the endotracheal tube of the patient is discontinued from a mechanical ventilator; 1) the mechanical ventilator provides a much higher flow to compensate for the low pressure in the ventilator circuit, and the condensates in the ventilator circuit may then be aerosolized from the forceful gas flow. This results in contamination of the air in the room".*[16] In conclusion, the aerosol generation risk associated with respiratory tract suctioning is likely linked to intubation/extubation and disconnection of the ventilator circuit. Respiratory tract suctioning, as included in the UK AGP list refers to suctioning performed beyond the boundaries of the oral cavity and is included based on a precautionary principle with the acknowledgement that the upper respiratory tract is a site of COVID-19 viral replication.

5.2 Respiratory infection in dental staff as a consequence of aerosol transmission

There is very little evidence available on whether dental staff are at risk of acquiring respiratory infection as a result of exposure to AGPs. No evidence was identified indicating that dental staff regularly acquire respiratory infection from patients directly via aerosols.

There is weak evidence of an increased risk of occupationally acquired viral respiratory tract infections in dentists determined by serology, however, these infections may have been acquired by direct or indirect contact with respiratory droplets as opposed to aerosols.[17]

One study by *Reinthaler et al*. (1988) found that there was a high prevalence of antibodies to Legionella infection among dental staff. Stagnant water in the dental unit was identified as a potential source of infection and was likely further spread by aerosols generated by high-speed drill and sprays.[18] The authors investigated serum samples from dental staff for antibodies to several Legionella species.[18] Serum samples were taken from dental personnel (n=107) and from a control group (n=106) outside the dental profession who were matched with the dental staff based on age and sex.[18] Both groups were tested for antibodies to *Legionella pneumophila.*[18] Thirty-four percent (36/107) of the samples in the dental group were positive, compared to 5% (5/106) of the samples in the control group ($p \leq 0.001$).[18] The highest prevalence was found among dentists (50%) and the lowest prevalence was found among technicians (20%).[18] The samples were only found positive when staff had been working in the dental practice for a minimum of 1.5 years, although no statistical analysis were carried out to support these findings. A further study identified a

high prevalence of antibodies to *Legionella pneumophila* among dental personnel, especially among dentists who frequently used high-speed drills and sprays.[18] Stagnant water in the dental unit was identified as the main potential source of infection.[18] No information was provided on whether the dental staff included in the study took any other infection control measures such as the application of PPE. It remains unclear whether samples of the water facilities in the dental practices were tested for Legionella in order to confirm their conclusions.

A fatal case of Legionnaire's disease in a US dentist was documented in a review carried out by *Laheij et al.* (2012).[19] [19] Investigations detected intrapulmonary *L. pneumophilia* and *L. longbeachae* in the case, as well as in the dental unit water lines (DUWLs).[19] The infection was attributed to the exposure of DUWL aerosols containing *Legionella spp.,* however, low levels of *Legionella spp.* were also found in the water supplies at the dentist's house, thus the evidence remains inconclusive.[19]

Of further interest, in the context of occupational health of dental healthcare workers exposed to aerosolised microbial particulates, is the work from Pankhurst et al where passive smoking and total aerobic counts of >200 cfu/ml in dental unit waterlines, were significant variables for developing asthma since starting training as a dentist.[20]

In conclusion, there is currently no strong evidence to support dental staff respiratory infection acquired from patients as a result of AGPs. However, limited evidence suggests that dental staff are exposed to microbial hazards such as Legionella species and bacterial endotoxins when performing aerosol generating procedures.

5.3 Dental aerosols

The evidence base for dental aerosols is heavily focused on their bacterial and blood content.[21] Studies have repeatedly shown that levels of bacterial air contamination are raised during treatment, however, it is often unclear if these elevated levels correlate with an increase in the number of persons/activity in the room rather than the specific procedure being performed. Inappropriate controls include rooms with no staff presence or activity. Raised levels of bacteria during treatment, even if in comparison to a suitable control environment, may still not be associated with the patient's oral cavity. The water spray associated with high speed devices is likely to be a significant source of bacterial air contamination and the settle plates commonly used are non-selective for oral based bacteria. It is also important to remember that bacterial air contamination may not mirror the

behaviour of a viral aerosol. Settle plates will also only be able to detect contamination from particles that have the weight to 'fall out' within the given sample time and cannot measure those particles which will remain in the air for extensive, and potentially infinite, periods of time.

5.3.1 Distance

It is clear from the few studies that report on dissemination of dental aerosols, that it is challenging to establish a defined zone or limit for their spread. In 2011, *Yamada et al.* provided evidence that blood could be detected at 100cm behind the patients' head during dental procedures using high speed drills or ultrasonic scalers.[22] Percentages of procedures which resulted in blood detection were compared with samples taken at 50cm behind the patients' heads.[22] There was a trend towards a reduced number of positives at 100cm compared to 50cm but this was not significant except for ultrasonic scaling (p=0.0398).[22] Similarly, *Ishihama et al.* (2009) attempted to detect aerosols containing blood at differing distances, behind patients' heads.[23] The ratio of positive blood presumptive test results was 76% at the distance of 20 cm.[23] At the distances of 60 and 100 cm, the positive ratios decreased to 60% (N=15/25) and 57% (N=4/7), respectively, though they were not significantly different from the ratio at 20 cm (p=0.1879).[23]

Rautemaa et al, (2006) aimed to assess how far airborne bacteria spread during dental treatment.[24] Settle plates were placed in pairs in 6 different locations 0.5m, 1.5m and 2m from the patient.[24] Swab samples were also taken from surfaces around the room and tested for microbial contamination.[24] Rooms where high speed instruments were used were compared to rooms where treatment was conducted without use of these instruments (control) and rooms where no treatment was conducted at all (rest).[24] The results were expressed as colony forming units (CFU)/m^2/h. During procedures using high-speed and ultrasonic instruments the mean density of aerobic bacteria was 823 CFU/m^2/h at <1 m distance from the patient and 1120 CFU/m^2/h at distances >1.5 m from the patient.[24] During periodontal and orthodontic treatment, the mean density was 598 CFU/m^2/h at distances >1.5m from the patient.[24] Rooms at rest had a mean contamination rate of 35 CFU/m^2/h.[24] Interestingly, not only does this study suggest that bacterial contamination of procedural origin was detected 2m from the source, but that contamination was actually greater in a location further from the source. The authors theorised that *"this phenomenon may be due to the increased rotating speeds of the instruments giving a higher angular*

velocity and longer trajectory of the bacteria".[24] The other issue to consider, in assessment of this study, is that it is unclear exactly what procedures were conducted or how many patients were seen in the 'intervention' and 'control' rooms. Rooms had air change rates of either 6 or 12/hour, dependent on the room used, and did not have air conditioning units.[24] It is possible that use of rubber dam and/or high volume suctioning may have had an effect on this trajectory phenomenon. In light of these limitations, this study should be considered to provide very weak evidence regarding aerosol spread.

In contrast to *Rautemaa et al's* finding, which aligns with a trajectory phenomenon, *Manarte-Monteiro et al*. (2013) found that in a multi-chair dental clinic, mean CFU/plate counts were significantly higher at a distance of 0.5m (19.0 ± 11.5) than at a distance of 2.0m (15.6 ± 8.2) ($p<0.001$) from patients for treatments where high speed drilling was used.[25] However, we cannot definitively state that this difference is related to aerosol spread - it most likely reflects closer proximity to persons and activity. Authors state that *"the ventilation system was checked periodically and was not altered during the study period"* and that a 'surgical aspirator' was used during high speed drilling.[25]

In *Pina-Vaz et al's* study, contamination with bacteria, specifically alpha haemolytic streptococci (and therefore most likely of oral origin) were found on plates 1m and 1.5m from the patient.[26] There was no significant difference in contamination based on the two locations. Authors state that "a conventional salivary ejector and an evacuator of low diameter, with no high-volume evacuation, were used", however, the air change rate of the room is not outlined.[26]

In an *in vitro* study, *Veena et al* (2015) added a fluorescent dye to water lines and, combined with a visual inspection method, attempted to ascertain the pattern of dissemination of dental aerosols created during ultrasonic scaling.[27] Paper discs were placed in radiating positions (1-5ft) from a phantom head and dye was detected at 4ft (1.22m) from the source.[27] The authors do indicate, however, that a low volume saliva ejector was used rather than a high volume aspirator.[27] Use of a high volume aspirator reflects the type of suction more commonly used during general dental practice treatment and may have reduced the dissemination of aerosols further, had it been used. Further limitations include the air change rate of the environment not being reported and the possibility that the solution used to represent water line liquid/patient saliva is not akin to the weight or consistency of in vivo liquids.

In a study with similar design to Venna et al's 2015 paper, Allison et al (2020) aimed to look at spread of dental aerosol in terms of distance, persistence of fallout 30-60 mins post AGP and effect of suctioning (6.3 L of water per minute) on aerosol behaviour.[28] Fluorescein was introduced to the irrigation reservoirs of a high-speed air-turbine, used for 10 minutes anterior crown prep (29.3 mL/min), an ultrasonic scaler used for 10 minutes full mouth scaling (38.6 mL/min) and a 3-in-1 device used to conduct air-water spray for 30 seconds on upper premolar (140.6 mL/min).[28] The procedures were performed on a mannequin in triplicate, with putty moulded into the mouth to replicate oral cavity boundaries. The study environment was a multi-chair clinic with 6.5 air changes per hour and all windows and doors closed.[28] Filter paper discs were placed at incremental radiating positions outwards from the mannequin oral cavity (0.5 m intervals along eight x 4 m rods). Following each procedure, the filter papers were left in position for 10 minutes to allow for settling and drying of aerosol and splatter.[28] Two methods of analysis were used; image analysis and spectrofluorometric analysis. It is assumed in this appraisal, that the spectrofluorometric analysis would have greater capacity to detect contamination than visualisation. In image analysis nothing was detected beyond 2m for the high speed drill use with suction or beyond 1.5m for the 3 in 1 spray use with suction, however, contamination was detected at 4m for the ultrasonic scaler with suction (mean 0mm^2, range 0-0.02mm^2) but at much lower levels than close proximity samples (e.g. 0m – mean 129.1mm^2, range 2.71-349mm^2).[28] Spectrofluorometric analysis (which was only used for samples produced as part of the high speed drill use with no suction procedure) resulted in contamination detection at the maximum distance measured (4 m).[28] RFU total contamination within the 4m radius area showed a decreasing trend in contamination from 0-1.5m (46091 RFU at 0.5 m, 3541 RFU at 1.0 m, 1545 RFU at 1.5m) but which then appeared to plateau from 2-4m (2097 RFU at 2m, 1506 RFU at 2.5m, 2739 RFU at 3m, 1106 RFU at 3.5m and 1695 RFU at 4 m).[28] This study's limitations include its pre-peer review status at appraisal, small sample sizes and in vitro nature. Water line contamination cannot directly correlate with dissemination of virus of salivary origin.

Osorio et al (1995) demonstrated a relationship between streptococcal bacterial air contamination and distance from the operating site.[29] This study aimed to assess bacterial levels in 5 different areas of surgery during ultrasonic scaling procedures using bacterial cultures.[29] The media were placed in five different positions: A) 30cm from operating field; B) 60 cm from the operating field; C) 150 cm from the operating field; D) in the corridor by

air conditioning intake grill and E) non-clinical area by the air conditioning propulsion grill.[29] As a control, plates with the same culture media were placed in two main areas i) a clinical area where treatments were carried out and ii) an office area. Statistically significant differences were found between the closest Mitis-Salivarius-Agar plates to the oral cavity (A and B) and those outside the clinical area (D and E) with a trend of decreasing contamination as distance increased.[29] In position A there was a mean CFU number of 437.5 with 111.5 in position B, 53.6 in position C and 0.6 in positions D and E.[29] This study, however, can only provide limited evidence as the sample size of 8 is very small and the study is specific to ultrasonic scaling procedures.

Aerosol dissemination throughout the air space of a dental treatment room may not create great concern regarding the protection of other patients, if certain control measures are employed. Keeping the room door closed, employing air extraction or ventilation systems and leaving a specified time between patients may be of use. However, in a multi-chair dental clinic, one may need to establish the distances between patients, which when combined with other measures, will facilitate prevention of aerosol transmission. Studies have shown that general bacterial air contamination levels, in areas of a multi-chair clinic where treatment is not being provided, mirror, to a degree, areas where it is being provided.[30, 31] *Grenier et al*. noted that an approximate 7-10 fold increase in bacterial air contamination during treatment was associated with an approximate 3 fold increase at a non-treatment site (11m away).[31] Authors argue that this emphasises aerosols' capacity for dissemination but there is no way to know that this mirrored increase is not simply due to general increased activity in the clinic and circulating air, although this study did focus on anaerobic bacteria which the authors outline, is more likely to be of oral rather than environmental origin.

Wide dissemination of aerosols is reported in a recent HPS rapid review which identified studies which assessed aerosol produced during high speed cutting of bone which may be somewhat akin to dental high speed drilling.[13] Irrigation fluids were artificially contaminated with *Staphylococcus aureus*.[32, 33] Settle plates were distributed throughout the operating theatre to assess bacterial air contamination during the 30 minute procedures and 5 minutes after.[32, 33] All Petri dishes in the 5x7m theatre area showed growth of *S. aureus* in both studies.[32, 33] However, the fluids used would have contained artificially high bacterial

counts and authors do not indicate if there was a correlation between distance from surgical site and levels of contamination.

Some in vitro studies have been conducted where air has been marked with smoke particles or ultraviolet sensitive detergents in order to visualise the dissemination of aerosols during specific medical procedures,[34, 35] unfortunately, this has not included dental procedures.

No guidance was identified which eluded to a defined area or zone, associated with a dental AGP, where infection risk was considered to be increased. The only exception being Portuguese guidance which outlined that if someone needs to accompany a patient into the treatment room, they should sit over 2 meters away from dental equipment, however, this could be advised to reduce the risk of equipment contamination.[36]

From an assessment of the limited evidence it is clear that establishing the extension boundaries of a dental aerosol is not possible. Blood, dye marked fluid and procedurally generated bacteria have been detected at 1m, 1.2m and 2m from patient sources respectively, with trends of decreasing bacterial fall out being demonstrated from 30 to 150cm, however, dental aerosols, in line with the surgical bone cutting aerosols previously described, most likely spread throughout the entirety of a room and settle to affect all exposed surfaces. A significant limitation of studies which attempt to establish a dissemination limitation or boundary of procedurally generated aerosols is that there is unlikely to be a defined limit. Unless one can establish infectious dose and have a clear understanding of the distance at which an aerosol becomes dilute enough to no longer present a threat of transmission, one must make a decision on infection control measures and defined boundaries which balances estimated risk with feasibility and appropriateness.

5.3.2 Time for aerosol fall out/removal

Very few studies have attempted to thoroughly assess the time which is required for aerosols or droplets to ‘fall out’ or be removed following a dental AGP. *Veena et al*, based on their observation of paper discs contaminated with fluorescent dye, found that following ultrasonic scaling (with low volume suctioning and an unknown ventilation environment) aerosols do not remain suspended in the air for longer than 30 minutes following termination of the procedure.[27] This was demonstrated through replacement of paper discs at 30 minute intervals following the in-vitro procedure.[27] Similarly, *Bennett et al* observed

peaks in concentrations of bacteria (defined as at least a threefold increase from background levels) in 6 out of 12 treatment sessions, however, a definitive link between peaks and AGPs could not be established. Presumptive oral streptococci (EPS-producers) made up over 50% of the colonies on TYC plates during peaks suggesting that some dental procedures gave an increased production of airborne orally-derived micro-organisms.[37] Peaks, which were measured at 1m from the ground, appeared to decrease to background levels within 10 to 30 minutes.[37]

In Allison et al's study (methods and limitations described on page 11), for an anterior crown preparation without suction process, filter papers were placed at 30 minutes and again at 60 minutes to examine persistence of aerosol and splatter.[28] At both of these time points (30 and 60 minutes) the risk of fluorescein transfer was minimised by placing the new filter papers on new platforms, and filter papers were then left for 10 minutes before collection.[28] Fluorescence was measured via spectrofluorometric analysis and presented as RFU (relative fluorescence units). The overall contamination across the 4m radius experimental area at 30-40 minutes was 191 RFU which was 0.02% of the original level (835,741 RFU) and at 60-70 minutes it was 822 RFU which was 0.10% of the original level.[28] In summary, authors claim to have found no contamination by image analysis at 30 and 60 minutes (results not presented), and only very low levels by spectrofluorometric analysis (≤ 0.10% of original levels). Authors do not provide a hypothesis as to why contamination levels within the area were increased at the 60-70 minute interval compared to the 30-40 minute time point. It is important to note that this study was conducted in a clinic with 6.5 ACH.

In contrast to these findings, some studies have reported longer fallout times. In *Grenier et al's* study, anaerobic bacterial counts before dental procedures were low (pre-ultrasonic scaling - 12 +/- 4 CFU/m^3, pre high speed drilling with rubber dam – 14 +/- 4 CFU/m^3).[31] Once treatment started, the levels of air contamination increased substantially (ultrasonic scaling - 216 +/- 75 CFU/m^3, high speed drilling with rubber dam – 75 +/- 22 CFU/m^3).[31] 30 minutes after the ultrasonic scaling treatment ended, the levels of anaerobic bacterial contamination of the air decreased by approximately 80% (to 44 +/- 14 CFU/m^3) and approx. 30% following drilling (to 51 +/- 22 CFU/m^3).[31] At 2 hours after the treatments ended, the counts were about the same as they were before the dental treatments began.[31] However, it cannot be ascertained if these bacterial fluctuations were due to aerosol

production or changes in staff activity. A study by Miller et al. concluded that it may take as long as 17 hrs for 50% of high speed hand piece generated dental aerosol to dissipate/fall out when generated at a 1m height.[38] However, this study was limited by its in vitro nature, an absence of ventilation or other control measures and use of a sample cube cited to create a stirring/settling effect through fan use, but with clarity needed on whether this would prevent or limit particle fall out.[38]

Similarly to *Grenier et al, Pina-vaz et al* looked at specific bacteria which could correlate with orally derived contamination - alpha haemolytic streptococci colonies.[26] They too attempted to provide evidence of a settle time following termination of dental procedures but the methodology meant that only limited conclusions could be drawn. Assessment of *Dutil et al's* study resulted in limited settle time conclusions. Levels of anaerobic bacteria, close to the patient's mouth (30cm away), appeared return to pre-procedural levels within 2 hours post treatment in a room with 1.2 air changes per hour.[39] However, it is important to note that anaerobic bacteria are not exclusively associated with the oral environment.

There is variation in international guidance regarding 'settle periods' following dental AGPs. French guidance advises 15 minutes of rest time following an AGP.[36] Swiss guidance similarly advises a 15 minute rest period after each patient but this is specified for treatment of non-COVID infected patients.[36] For those where COVID-19 is suspected or confirmed, dental staff must wear their FFP respirators for 30 minutes post AGP completion.[36] In Canadian COVID-19 guidance, a post-AGP air settling time of 120 minutes is recommended, before cleaning and consultation with the next patient can commence, however the guidance goes on to state that if the number of air changes per hour (ACH) in the room permits, the settle time can be decreased although specific ACH figures are not supplied.[36] Some guidance is quite vague regarding settle time recommendations with Portuguese guidance outlining that one should 'renovate' the air at the end of each appointment and Belgian guidance advising that the treatment room should be ventilated 'according to the amount of AGP'.[36] In regards to air quality, Belgian guidance recommends switching between different treatment rooms following AGPs.[36] UK guidance currently recommends a fallow time of 60 minutes from cessation of the AGP,[10, 11] with the Faculty of General Dental Practice (FGDP) and College of General Dentistry (CGD) advising that this time can be shortened through implementation of mitigating measures.[11]

In summary, variation in fall out time guidance reflects the heterogeneous methodologies and conclusions found with the scientific evidence base. Very weak evidence currently suggests that peaks in bacterial dissemination may take approximately 30 minutes to dissipate but further research is needed. Research regarding fallow time should focus on the time needed for a significant proportion of viable infectious particles to have fallen out/been removed to merit a highly reduced and therefore acceptable risk, with additional consideration of how control measures, such as use of rubber dam of high volume suctioning, may result in an initial reduction in particle number.

5.3.3 Particle sizes

Rates of droplet and aerosol fallout have been estimated based on calculations involving the size of particles.[40] Only limited evidence is available in relation to dental AGPs and the particle sizes produced. Five studies investigated the particle sizes in dental practices.[38, 41-44] A limitation in these studies was the lack of proper comparison areas. Sampling for the baseline measurements are carried out either in a room where no procedures are taking place, an adjacent room to the surgery, or an area outside the facility. Ideally, these studies should contain a comparison of particle sizes between rooms where procedures are conducted and rooms with equal numbers of staff and activity but without a procedure. This limits the ability to differentiate between particle sizes produced by dental staff or activity in the room and the actual dental procedure.

A study by *Sotiriou et al*. (2008) measured the particle number, size, mass concentrations and elemental composition of the particles in a dental office during dental drilling procedures.[41] Air samples were taken over a 5-day period and collected for around 5 hours each day in a treatment room exclusively used for drilling.[41] Measurements were collected using a tube placed close to the patient's head connected to a number of sampling devices. Both the particle mass and particle concentration increased in the air during periods of drilling.[41] These measurements were compared to samples collected on a day with no procedures, which is a limitation. The average mass concentration of airborne particles was around three times larger than the baseline (approx. 45 $\mu g/m^3$), and around four times higher than the baseline (approx. 4×10^4 particles per cubic centimetres) at its peak.[41] This particle concentration was for those between the sizes of 0.02 and 1.0 µm.[41]

An observational study by *Polednik* (2014) assessed the aerosol particle number and mass concentrations within a dental practice in Poland under regular working conditions.[42]

Bioaerosol contamination and elemental composition of particles deposited were also investigated. Air samples were collected from the dental procedure room, an adjacent room and outside the building.[42] Sample tubes were placed 0.8 metre from the patient's head.[42] Numerous dental procedures were undertaken during the study period, including drilling and scaling; although the highest increases in particle concentrations were seen during procedures which involved grinding and drilling. The concentrations of particles with an aerodynamic diameter equal or less than 1µm, increased an average of 3.4 (s.d 1.4) times, bringing the average concentration to 93.8µg/m3, and the maximum concentration to 209.0 µg/m3, which was 7.7 times higher than the baseline values.[42]

The National Institute for Occupational Safety and Health launched an observational experiment in two dental practices following concerns about transmission of pandemic strain influenza A virus (pH1N1) to dental employers.[43] Each practice was visited four times over a 6-week period and were sampled for pH1N1, seasonal influenza and respiratory syncytial virus (RSV).[43] Air samples were collected with samplers that separated airborne particles into three sizes: ≥ 4.1 µm, 1.0-4.1 µm and ≤ 1.0 µm and placed either at 2 to 3 feet or 4 to 8 feet from the potential sources.[43] On one day, a seasonal influenza A strain (H3N2) ≤1.0 µm was detected from air samples collected 2 to 3 feet from the patient area in three different exam rooms.[43] On another day, one air and one surface swab sample, both obtained in the same room, were positive for RSV.[43] RSV was detected in the first stage (≥ 4.1 µm size particles) of the aerosol sampler located on the dental exam light above the patient dental chair.[43] The RSV positive surface swab was collected on the right armrest of the same chair.[43] This study shows that RSV and influenza virus can be detected in the air close to the area of patient treatment (approx. 2-3ft) in small particles. However, we cannot know if samples were viable and capable of causing infection and virus was not detected in the samplers which were further away (approx. 6ft). Graphs are included which show results of the hand held particle counter device (which was used alongside the bio aerosol samplers to detect particles in 6 size groups).[43] Variation in particle counts (separated by size groups) are shown over time. Unfortunately, authors do not indicate what corresponding procedures were being conducted and when. The graph does appear to indicate a pattern whereby certain particle size groups can be seen to return to pre-session levels (report figure 8)[43] at certain points but drawing further definitive conclusions from these graphs is challenging.

In *Miller's* 1995 in vitro study, powered dental instruments, including an air turbine hand piece (water spray of 50mL/min, 10L/min air stream and 30L/min discharge of turbine drive air at the turbine head) were applied to 1ml of whole blood for 1 minute in an oral cavity model.[38] Aerosols were generated and contained at ambient temperature, inside a $1m^3$ cube.[38] Aerosol samples were collected by cascade impactor (2L/min) with 10 samples collected in 6 hours. Miller outlines that 997.8µL of the 1ml blood sample "was driven into ballistic splatter particles, nominally >100µm in size, bloody splashes and bloodied pools of dental instrument supplied water".[38] The air turbine with air and water spray produced aerosols at a rate of 0.20-0.90µL per minute.[38] In the aerosol cloud, particle sizes ranged from 0.06-13µm.[38] Miller's paper includes bar graphs which demonstrate how the profile of the aerosol changed over time in relation to proportion of different particle sizes. At 2 minutes it appears as though approximately 40% of the aerosol's particles are between 6.9 and 13µm, approximately 30% are between 1.2 and 3.8µm with approximately 40% less than 1.2µm.[38] At 35 minutes, particles of sizes 13µm and 6.9µm only represent approximately 2% of the sample, approximately 40% are between 1.2 and 3.8µm and 55% are less than 1.2µm.[38] At 4 hours, only 15% are categorised as 1.2µm in diameter with the rest being smaller than this.[38] Miller outlines that "the mass median diameters for air-turbine air-water sprays ranged from 0.38µm MMD at aerosol age 1 minute to 0.12µm MMD at 6 hours", however, this does not appear to align with the graphs presented.[38] This study is limited by its in vitro design with no salivary element to the aerosol. The fan illustrated at the base of the sample cube is cited to create a stirring/settling effect, however, it is unclear if this would prevent or limit particle fall out. This study does not factor in any room ventilation or control measures such as high volume suctioning and there is a question as to the similarity of the powered instruments tested in comparison to those used in general dental practice today.[38]

Micik et al attempted to establish the characteristics of bacterial aerosols generated from the mouth of patients during selected dental operations.[44] In this study the head of the patient was enclosed within a 30x30x90cm test chamber.[44] Filtered air was introduced into the rear of the test chamber at 113.2 L/min and was drawn out at approximately the same rate (with vacuum pumps).[44] Air that was drawn out was passed through Andersen sampler device which separated particles based on size.[44] The plates used were aerobically incubated. Only the patient's face was exposed within the chamber. "To insure stable pressure conditions, a compensating filtered air supply was automatically activated when

suction was used during a dental procedure".[44] Base line background bacterial concentrations of 1 CFU/min were recorded with a patient performing minimal activity (quiet closed mouth breathing).[44] Settings for the equipment were as follows: hand piece air at 8.5L/min, hand piece water at 12 ml/min; three-way syringe air at 14.1 L/min, and syringe water at 12 ml/min.[44] Water was disinfected with 1% sodium hypochlorite which "was passed through the water lines periodically to suppress bacterial growth".[44] Hand pieces, three-way syringes, hoses and the test chamber were wiped with alcohol.[44] 12 patients and six dentists participated in the study. For cavity preparation with use of air turbine handpiece and water coolant a median of 1000 CFU/min was produced (range 52-8500 CFU/min).[44] The results table then indicates that 95% of particles were less than or equal to a specific diameter, which from context appears to be 5µm but one cannot be certain, the figure appears to be missing from the table.[44] It is slightly unclear as to whether suctioning was employed during the tests where characteristics of dental aerosols were assessed. Methods text does state that "during procedures incorporating oral evacuation, a standard plastic tube (9.5 mm diameter) was directed by an assistant".[44] It also appears to state that a saliva ejector was used as well, which suggests that the aerosols characterised may have been affected by use of an aspirator combined with a saliva ejector. Particles could have conceivably come from the unsterilized hand piece or participants' face. As a six stage Andersen sampler was used then the percentage of particles below a certain size would truly be a percentage of the total of only those particles which the sampler could extract – not necessarily all of the particles produced by the procedure.[44]

In conclusion, evidence cannot currently provide reliable information on the particle sizes which make up a dental aerosol produced during high speed drilling or ultrasonic scaling, however, very weak evidence suggests that the aerosol cloud itself may have a significant proportion of particles which are less than 1-5µm in diameter.

5.4 Dental aerosol control measures

Multiple papers and guidance documents were identified which provided advice on dental aerosol infection control precautions in relation to SARS, MERS or COVID-19, however, virtually no evidence was cited to support these recommendations.[7, 10, 45-53] No evidence was identified which demonstrated the efficacy of dental aerosol infection control measures employed during this COVID-19 pandemic or in response to outbreaks of SARS or MERS.

A recent rapid review by a UK COVID-19 working group summarised themes from 12 reports on national recommendations for the re-structuring and re-opening of dental services from 11 countries.[36] Themes deemed relevant to aerosol infection control were patient scheduling, environmental cleaning and air quality.[36] In relation to patient scheduling, 2 sources advised scheduling the appointments of high risk or vulnerable patients in a way that minimises contact or exposure to other patients.[36] For environmental cleaning, 6 sources provided information on how the work surfaces in the clinical room should be kept clear, with all required equipment/materials being prepared and laid out in advance.[36] Two sources indicated that common contact areas such as the chair lamp, handles and keyboard should be covered with a barrier (e.g. plastic film or aluminium foil).[36] Nine sources recommend cleaning and disinfection of all surfaces following every patient contact with 2 recommending clinical floor cleaning 2-3 times daily.[36] All 12 sources included recommendations on the reduction or avoidance of AGPs with one source recommending limiting use of the air-water (3-in-1) syringe.[36] Ten sources recommended rubber dam and high volume suction with 9 recommending the use of pre-operative mouthwashes.[36] Eleven sources recommended aspiration to specifically decrease viral load generated by aerosols with 1 indicating that the aspirator tip should be covered with a disposable cover.[36]

Additional, potentially aerosol related infection control measures, identified from international guidance, include; prescribing a COVID-19 test for those patients who require AGPs, using anti-retraction/non-return valved hand pieces, and scheduling AGPs for the last appointment of the day.[36]

5.4.1 Rubber dam isolation

The majority of the identified literature is in agreement that the use of rubber dam isolation during restorative procedures in dental practices can contribute to the reduction of cross-contamination from dental aerosols and many COVID-19 dental guidance documents encouraged their use.[36] The included studies emphasize that rubber dam isolation should preferably be used in combination with other infection prevention control measures, such as personal protective measures, mouth rinse and high-volume aspiration. In general, studies investigating the effectiveness of rubber dams study the distribution of bacterial contamination which often does not equate to true infection risk. The sample sizes tend to be small and the type of ventilation in the dental practices is often not discussed.

Samaranayake et al. (1989) aimed to evaluate any changes in atmospheric bacterial pollution in the area where ten children underwent routine conservative procedures with rubber dam isolation, compared to a group of ten children who underwent the same procedure without a rubber dam isolation.[54] The conservative procedures were performed using an air-turbine-drive hand piece and a high-volume aspiration with external venting. Samples were collected before, during and after the procedure, at 1, 2 and 3 meters from the headrest of the dental chair.[54] No significant difference in the background bacterial counts were found when preoperative and postoperative counts were compared at one, two and three meter positions. A highly significant reduction of 88 percent was found in bacterial contamination during the procedure at one meter from the chair when the rubber dam was used ($p < 0.001$), although at 2-meter position this figure dropped to 72% ($p > 0.05$), and at 3 meter no reduction in bacterial count was found.[54]

A study by *Cochran et al.* (1989) evaluated the use of rubber dam as a supplementary infection control measure during restorative procedures in the dental office.[55] The study was divided into two parts. Sixteen participants were included in the first part of the study where microbial sampling was performed during preparation and placement of amalgam and composite resin restoration.[55] One lesion of each pair was restored using rubber dam isolation and high-volume evacuation; the other was restored using cotton roll isolation and high-volume evacuation.[55] The second part of the study included ten participants. A rubber dam was used in one appointment during the procedure that included hand piece and air-water syringe spraying, whereas the other appointment included cotton rolls.[55] Samples were taken from four plates attached to the dental operating lights and the patient's chest. A larger reduction in CFUs in the procedures with the rubber dam were identified from the collection sites on the dental operating lights than from the patient's chest. Overall, a 90-98% reduction of microbial contamination was produced with the rubber dam.[55]

El-Din et al (1997) aimed to evaluate any changes in atmospheric bacterial pollution during conservative procedures and evaluated the efficacy of rubber dam, antiseptic mouth rinse and both procedures together.[56] Twenty participants were included and divided into four groups: A) conservative procedures performed under rubber dam isolation; B) chlorhexidine mouth rinsing 30 minute prior to the start of the conservative procedure; C) chlorhexidine mouth rinsing before application of the rubber dam; D) conservative procedure performed without rubber dam isolation.[56] Samples were taken, before during and after the procedure, from four places around the patients' head, and at one and two metre from the head-rest of

the dental chair.[56] The highest airborne bacterial contamination was found on the patient's chest. At one metre distance, there was a 98.8% bacterial reduction, which increased when chlorhexidine mouth rinsing was used prior to the rubber dam application.[56] Procedures without the rubber dam increased the airborne bacterial load from 8.8 to 25.1 CFUs, which was significantly significant, whereas with the rubber dam in place, CFUs were not significantly different when measured pre- or perioperatively.[56]

Dahlke et al. (2012) visually assessed contamination levels created with use of high volume suctioning (57.1 mL/second) either alone or in combination with use of a rubber dental dam.[57] High speed occlusal surface preparation on mannequin teeth was performed with a fluorescent dye added to the waterline to enable visualisation of spatter.[57] A 4x3ft wooden platform was placed around the mannequin head, meaning that splatter would be detected within a range of roughly 2ft in each direction.[57] Paper was placed on this area and visually examined after each trial using a squared grid overlay. During the procedure the authors report that the door was closed and they covered the air inlet vent to the room so that no airflow currents were present.[57] Suction and hand piece were held by clamps rather than operator or assistant which may have allowed further undisrupted dispersion of spatter. Use of the dental dam created a significant decrease in the number of contaminated squares ($P < 0.001$) compared with that for the non-isolated control.[57]

In contrast to the above studies, *Al-Amad et al.* (2017) found that the average number of CFUs was higher in the rubber dam group than in the non-rubber dam group, albeit this difference not being statistically different.[58] The rubber dam group however was significantly associated with increased bacteria-containing aerosols when the collection points were adjusted ($p=0.009$).[58] The authors of this study looked at the effect of the use of rubber dams on the amount of bacteria cultures from various regions of the clinician's head during routine restorative dental treatment. Samples were taken from four different positions on the headscarves of the individuals carrying out the procedure.[58] Headscarves had been autoclaved prior to the procedures.[58] No samples were taken from other locations or distances in the room. This study cannot provide evidence for the effect of rubber dam isolation on aerosols due to the samples having been taken at such close proximity. Contamination in this zone may have been due to splashes and droplets which may have been increased due to the rubber barrier deflecting water line (rather than orally derived) bacteria.

In conclusion, there is limited evidence to suggest that use of rubber dam may reduce bacterial air contamination by approximately 88-98% at 1 metre from the source with a diminished percentage reduction at greater distances from the procedure (eg. 72% at 2m). It may be that the reduction seen at 1m does not exclusively represent aerosol reduction but rather airborne droplet reduction and those reductions seen at greater distances may more accurately represent aerosol reduction (approximately 70%).

5.4.2 High volume suctioning

There is general consensus in the literature that 'high volume' suctioning, close to an aerosol generating source, may reduce transmission risk through a reduction in particles reaching the breathing space of the operator. Publications, however, can often be unclear as to precisely what they mean by 'high volume' suctioning or evacuation and whether they are referring to an extra-oral evacuator device, an intra-oral assistant guided aspirator tip or an intra-oral saliva ejector.

In international dental service remobilisation guidance the terms 'surgical suction' (Portugal), 'low and high speed suction simultaneously' (Switzerland), 'large suction tip' (Belgium), 'vacuum suction' (Norway), 'effective saliva suction' (Denmark), 'high volume suction' (Malta), 'high evacuation suction' (CDC, USA), 'high velocity evacuation' (ADA, USA) are all used.[36] UK guidance from the Faculty of General Dental Practice and the College of General Dentistry advise that 'high volume suction' or 'high volume aspiration' should be used with an orifice diameter of at least 8mm.[11] However, all of these sources can only be considered expert opinion.

In a 2004 narrative review, *Harrel et al* define high volume evacuation as suction which removes a large volume of air within a short period.[59] They state that "the usual HVE used in dentistry has a large opening (usually 8 millimeters or greater) and is attached to an evacuation system that will remove a large volume of air (up to 100 cubic feet of air per minute)" and clarify that "the small opening of a saliva ejector does not remove a large enough volume of air to be classified as an HVE".[59] In another recent narrative review, it was stated that reduction of aerosols can be achieved with a powerful suction system and approximate suction volume of 250-300l/min.[60] A wider suction tip is recommended; as smaller diameters reduce the suction volume. The authors also advise using a suction tip with a secondary air inlet to maintain suction flow even if the tip is clogged.[60] However, as

with the previously described guidance, these sources can only be considered as expert opinion.

Sawhney et al. (2015) demonstrated, using a split mouth technique in 20 patients, that use of a high volume suction apparatus with the tube kept as close as possible to the ultrasonic tip appeared to cause a reduction in aerobic bacterial air contamination compared to use of no 'high volume suctioning'.[61] There was a significant difference in the percentage of plates which had growth when comparing use of suctioning and non-use. Without suction 16 (80%) plates had growth and 4 (20%) had no growth, with suction 8 (40%) had growth and 12 (60%) had no growth (p=0.025).[61] Unfortunately, the authors do not provide additional detail on the suction apparatus used or its settings and the distances of settle plates from the source (chest of patient, dental chair tray and 6 inches from subject's mouth) mean that both droplet and aerosol derived contamination are likely.

In contrast to *Sawhney et al's* findings, *Desarda et al* (2014) assessed bacterial air contamination during ultrasonic scaling treatment of 80 chronic generalised periodontitis patients with or without high volume suctioning and found no statistically significant difference in the number of CFUs either at 12 inches (p=0.49) or 20 inches (p=0.617) from the operative site.[62] A coin toss was used to determine which procedure was to be performed first. The high volume evacuator had a 12mm tip and in both scenarios a disposable saliva ejector was used for saliva ejection.[62] Nutrient agar plates were exposed for a total of 20 minutes (10 mins of scaling, 10 mins rest time post procedure). Following incubation, agar plates were examined by a microbiologist who was blind to the procedures.[62] A significant limitation of this study was the type of non-selective plates used with an inability to confirm the presence of orally derived bacterial contamination and no further detail on the suction capacity of the high volume evacuator.

An in vivo study by *Klyn et al* (2001) investigated the effect of an aerosol reduction device (ARD), a preoperative 0.12% chlorohexidine gluconate (CHX) antimicrobial rinse, and a combination of the two on the bacteria-containing splatter and aerosols produced during ultrasonic scaling.[63] Fifteen adult participants were included in the study with each quadrant of their mouths randomly assigned to one of four procedure groups. Group 1 (control) no ARD or preoperative CHX rinse, group 2 – ARD only, group 3 – preoperative CHX rinse only and group 4 – both ARD and preoperative CHX rinse.[63] A new, non-contaminated treatment room was used for each group to avoid cross contamination. The ARD was attached to the high-speed evacuation system and 30,000 Hz cavitron ultrasonic scaler.[63]

Samples of bacterial aerosols were collected using blood agar plates. Three plates were placed 6 inches from the oral cavity and 1 was placed 2 feet away from the subject.[63] The plates were exposed for the 5-minute scaling procedure and then for 5 minutes post-procedure. Mean CFU counts from plates located 6 inches from the oral cavity for each treatment group were as follows; group 1 (control) - 156.9 (± 198.7), group 2 (ARD only) - 11.4 (± 18.3), group 3 (CHx only) - 76.2 (± 118.5) and group 4 (CHx and ARD) - 14.1 (± 10.6).[63] Groups 2, 3, and 4 showed a significant reduction in CFU count when compared to group 1 (control).[63] This study does however, have a small sample size of only 15 participants, the aerosol reduction device used in the study is not described in detail, only as a specialised suction device and with plates so close to the source, one cannot ascertain the effect of the device on aerosols alone.

A 1996 study by *Harrel et al,* showed, in a simple fashion, how suctioning can reduce environmental splatter caused by ultrasonic scaling.[64] Artificial teeth underwent mock ultrasonic scaling for 1 minute with and without a high volume evacuator attached. Twenty iterations were conducted within a plastic gridded enclosure.[64] A standard high volume dental evacuator system from the dental unit was used with a vacuum pressure of 140 mm/Hg. Ultrasonic coolant volume of 17.5 ml/min with added red coloured 'erythrosin solution' was used.[64] Aerosol contamination produced during 1 minute of ultrasonic scaler use was measured by counting the number of squares in the grid on the plastic enclosure that contained at least 1 red spot.[64] The high volume evacuator attachment produced a 93% reduction in the number of contaminated squares ($p<0.05$), however, a major limitation of this study was the visual assessment of contamination and an inability to distinguish between droplet and aerosol contamination.[64] This study also did not mirror conventional in vivo practice in a number of ways including the aspirator tip being attached to the ultrasonic scaler.

Micik et al attempted to compare the microbial content of aerosols generated during dental operations with and without the use of high-velocity suction.[44] In this study the head of a patient was enclosed within a 30x30x90cm test chamber.[44] Filtered air was introduced into the rear of the test chamber at 113.2 litres per minute and was drawn out at approximately the same rate (with vacuum pumps).[44] Air that was drawn out was passed through a six stage Andersen sampler device which separated particles based on size. The plates used within the sampler were aerobically incubated. Only the patient's face was exposed within the chamber.[44] "To insure stable pressure conditions, a compensating filtered air supply

was automatically activated when suction was used during a dental procedure".[44] Base line background bacterial concentrations of 1 CFU/min were recorded with a patient performing minimal activity (quiet nasal breathing).[44] Water was disinfected with 1% sodium hypochlorite which "was passed through the water lines periodically to suppress bacterial growth".[44] Hand pieces, three-way syringes, hoses and the test chamber were cleaned and wiped with alcohol. 12 patients and six dentists participated in the study.[44] For cavity preparation with use of air turbine handpiece and water coolant the authors demonstrated that high volume suctioning with a standard aspirator tip, "a standard plastic tube (9.5 mm diameter)" "3/8-inch inner diameter", provided a mean (10 tests) percentage reduction in CFU/min of 99.4% (range 96.6-99.9%) (reduction from 1980 to 12 CFU/min).[44]

In Allison et al's 2020 study (methods and limitations described on page 11), environmental contamination during anterior crown preparation was compared with and without suctioning.[28] Authors claim that suctioning (6.3 L of water per minute) reduced contamination by 67-75% at 0.5-1.5 m, however, no contamination was detected beyond 2 metres and so the reductions in association with suctioning may simply align with droplet contamination removal rather than aerosol.[28] If using the contamination levels at 1.5m and 2 m as an indication of aerosol reduction, total contamination was 0.75mm^2 at 1.5m without suctioning and 0.13mm^2 with, representing a reduction of 83%. At 2m, total contamination was 0.11mm^2 without suctioning and 0.01mm^2 with, which is a reduction of 91%. However, as these reductions represent those of 'fall out' contamination, one cannot know the effect that suctioning had on those aerosols, which remain airborne for longer, or potentially infinite, periods.

It is challenging to draw conclusions regarding aerosol reduction achieved through use of high volume suctioning. Most studies, where samples were taken in close proximity to the procedure, show a significant reduction in bacterial air contamination through use of high volume suctioning, however, this could simply represent a reduction in dispersion of splashes or droplets rather than a reduction in aerosol dispersion. Very weak evidence suggests that there may be a high reduction of aerosol dissemination through use of suctioning (80-90%).

5.4.3 Pre-procedural rinsing

There are many studies which assess reduction in bacterial concentration of the dental surgery air following pre-procedural rinsing with different products. A systematic review by

Marui et al. (2019) indicates that there is moderate evidence that certain pre-procedural mouth rinses reduce numbers of viable bacteria in the aerosol generated during different dental procedures, however, this cannot be extrapolated to a consideration of viral aerosol contamination reduction.[65]

Parhar et al. recently published a systematic review on topical agents which could be used as oral rinses and may have SARS-CoV-2 virucidal properties, with a focus on their use in head and neck mucosal surgeries.[66] Povidone-iodine and chlorhexidine are both discussed in depth including their safety and availability. The authors state that povidone-iodine has demonstrated both antibacterial and antiviral properties in past studies and, while there has not yet been studies on SARS-CoV-2, there are studies proving efficacy against related coronaviruses.[66] They state that some studies show that chlorhexidine has virucidal activity against enveloped viruses such as herpes virus 1, cytomegalovirus, influenza A, and hepatitis B, but not against non-enveloped viruses.[66] Alone chlorhexidine has been found to be less effective against coronaviruses compared to povidone-iodine. The authors recommend the use of povidone-iodine in reducing the viral load of SARS-CoV-2, however it is highlighted that further confirmatory studies are needed. In addition, it is noted that the authors do not critically appraise the methodology used to determine anti-viral efficacy or cross reference to any national standards for demonstration of anti-viral properties.[66]

Bidra et al's in vitro study investigated the optimum contact time and concentration of poviodone-iodine (PVP-I) to be used against SARS-CoV-2 in dental facilities.[67] The authors concluded that poviodone-iodine at a dilution of 0.5% and a contact time of 15 seconds resulted in a >3 $\log^{10}$ reduction of infectious viral dose and therefore they suggest its use as a pre-procedural oral rinse in addition to personal protective equipment to protect dental staff and patients from SARS-CoV-2 infection risk, however, this study was in vitro and further investigation is thus required.[67]

Pre-procedural mouth rinsing with either povidone-iodine solution or hydrogen peroxide is currently recommended by some countries (Portugal, Switzerland, Belgium, Norway, Malta, Canada) but not others (Australia, the USA, UK, Denmark or France).[36]

A key limitation of pre-procedural rinsing is that potentially infectious saliva will be continually produced by the patient during the procedure and as such, any virucidal effects of rinsing will most likely be gone within a very short time frame. The FGDP and CGD

emphasises that at present, there is inadequate evidence to support the efficacy of the use of prophylactic mouthwash for COVID-19 risk mitigation.[11]

5.4.4 Ventilation and air clearance systems

In their 2001 review, *Leggat et al* outline that; "little has been written about the effect of changing ventilation and working patterns on the concentration and composition of bacterial aerosols in different types of dental clinics".[21] This remains evident upon appraisal of the literature today. There is general consensus that a ventilation system, in good working order, should be used within the dental setting to reduce air contamination.[68] It is advised that air conditioning (AC) systems should be used with caution as they could be a vehicle for dissemination of contaminated air into other areas of the practice.[21, 59] The CIBSE advise against recirculation of air and that "any ventilation or AC system that normally runs with a recirculation mode should now be set up to run on full outside air where this is possible" and "recirculation of air between spaces, rooms or zones occupied by different people should be avoided".[69] In general, however, recent guidance from the office of the chief dental officer, England (OCDO) outlines that there is currently insufficient evidence to indicate transmission of viable virus through air vent and air conditioning systems.[10]

A specific air change rate for dental practices or multi-chair clinics is challenging to identify from the literature, especially for circumstances where airborne precautions are required. The Scottish Health Planning Note (SHPN) 36 part 2 (2006) advised that dental treatment rooms should be neutrally pressured with 10 air changes per hour.[70] This planning note also recommends that wherever possible, spaces should be naturally ventilated, but that for some areas mechanical extraction will be required, for clinical and/or functional reasons.[70] Authors state that "air movement induced by mechanical ventilation should be from 'clean' to 'dirty' areas, where these can be defined".[70]

As part of general health and care setting airborne precautions, the World Health Organization currently recommend a negatively pressured room with a minimum of 12 air changes per hour (the equivalent of >80 l/s/patient for a 4×2×3 m^3 room) for new builds and major renovations.[71] They state that this type of room can be naturally or mechanically ventilated and that the air flow should be directed to areas free of transit, or permit the rapid dilution of contaminated air into the surrounding areas and the open air.[71] The CDC advise >12 ACH for new builds and >6 ACH for existing buildings (e.g. equivalent to 40 l/s for a

4×2×3 m^3 room) with an exhaust to the outside, or a HEPA-filter if room air is recirculated.[71] In contrast to individual rooms, 60 l/s/patient is recommended by WHO for general wards and outpatient departments.[71]

Coia et al (2013) advise that assuming perfect mixing, a single air change removes 63% of airborne contamination, and each subsequent air change removes 63% of what remains; therefore, post cessation of an AGP, five air changes should reduce contamination to <1% of its former level.[72] Current UK COVID-19 guidance reflects this expert opinion by advising that, following AGPs conducted within a single room with 6 ACH, one would need to wait one hour before entry without respiratory protective equipment,[8] however, guidance from the office of the chief dental officer has recommended a post AGP settle time of one hour based on dental rooms with neutral pressure and no established ACH.[10] The OCDO go on to advise that "windows in neutral pressure rooms should be opened, or extractor fans that vent to the exterior should be used, as air passing externally will be highly diluted and is not considered to be a risk".[10]

In regards to specific air filtration or removal systems, the OCDO advise that providing recommendations for these devices is challenging as there is variability in the rate at which air is passed through the device and the filtration efficacy, which is also affected by filters becoming progressively blocked over time.[10] The CIBSE advise that "in poorly ventilated spaces with a high occupancy and where it is difficult to increase ventilation rates it may be appropriate to consider using air cleaning and disinfection devices" with HEPA devices being outlined as the most appropriate.[69]

Two studies were identified which assessed the efficacy of extra-oral high volume evacuation systems in the dental setting. *Hallier et al*. (2010) assessed the ability of the IQAir system to reduce bacterial air contamination during dental procedures.[73] Authors explain that the IQAir system *"comprises a 1,500 mm long flexible polypropylene plastic suction duct (125 mm diameter) that firstly directs air through a combination of High Efficiency Particulate Air (HEPA) pre-filters which retain particles less than 0.3 µm in size […] A second filtration stage involves four cylinder gas filter cartridges, which remove mercury vapour, formaldehyde, glutaraldehyde and odours. The final filtration stage comprises of an electrostatically charged post-filter".*[73] The sampler was located 20cm away from the patient, running continuously and with agar plates being replaced every 10 minutes. Samples were taken for four different procedures with two patients per procedure -

history and examination, cavity preparation, ultrasonic scaling, and tooth extraction.[73] One patient received treatment with use of the air system and one without. This equated to a very small sample size of 1 measurement for each scenario.[73] Significant reductions were seen when using the air system during cavity preparation (105.1 CFU/m^3 without, 38.4 CFU/m^3 with, p=0.018), ultrasonic scaling (70.9 CFU/m^3 without, 38.5 CFU/m^3 with, p=0.027), and tooth extraction (66.1 CFU/m^3 without, 37.0 CFU/m^3 with, p=0.036).[73] A reduction in bacterial count was seen when using the air system during history and examination, however it was not significant. This study is considered very weak evidence due to a number of limitations which include a failure to report on the similarity regarding oral condition, between patients treated with or without intervention and the very small sample sizes. Authors also do not specify the manner in which treatment was provided ie. use of high volume suctioning or dental dam and do not state how many people were present during each control or intervention procedure.[73]

Narayana et al. assessed the bacterial air contamination during ultrasonic scaling of three groups of patients and the ability of an extra-oral HVE device to reduce it.[74] Each group was comprised of 15 patients with each patient undergoing a split mouth procedure with an intervention for one side and control for the other.[74] Blood agar settle plates were placed close to the head of the patient with a splash guard. In group 1 ultrasonic scaling before and after the use of Chlorhexidine (0.12%) pre-procedural rinsing was assessed. In group 2 ultrasonic scaling before and after the use of high volume evacuation (HVE) combined with CHX (0.12%) pre-procedural rinsing was assessed and in group 3 ultrasonic scaling before and after the use of HVE was assessed.[74] While using HVE, pressure was maintained at 30–40 psi kg/cm^2 with the tube aperture placed just extra orally. Log CFU was significantly reduced with use of HVE (2.22 +/- 0.94) compared to without (3.38+/- 0.80) ($p<0.001$).[74]

Guidance frequently acknowledges the importance of ventilation and air renovation within the dental setting but does not provide specific parameters. Portuguese guidance advises that before the appointment, air circulation should be encouraged through opening windows and, if A/C is available, it should be used only in extraction not recirculation mode.[36] Swiss guidance outlines that treatment is forbidden in a room without a window or adequate ventilation whilst Belgian guidance advises that air conditioning should be turned off.[36]

UK COVID-19 dental guidance advises that “opening windows or the use of a single room air conditioning unit, or air conditioning system that has recirculation turned off (extraction only mode) will improve ventilation” and expands on this point to highlight that treatments

involving AGPs “should be avoided in windowless rooms and those with windows that cannot be opened, unless they have additional mechanical extraction ventilation”.[11]

6. Conclusions

The evidence base is too limited to establish a defined ‘at risk’ zone where inhalation of dental aerosols is likely to result in COVID-19 infection. Until the infectious dose can be established and the distance at which an aerosol becomes dilute enough to no longer present a threat of transmission is determined, a decision on the infection control measures and defined boundaries must be made based on a balance of estimated risk with consideration of feasibility and appropriateness.

The evidence base cannot currently support a defined and appropriate fallow time for dental AGPs in the context of the COVID-19 pandemic. Very weak evidence currently suggests that peaks in bacterial dissemination during dental procedures may take approximately 30 minutes to dissipate but further research is needed.

Evidence cannot currently provide reliable information on the particle sizes which make up a dental aerosol produced during high speed drilling or ultrasonic scaling, however, following fall out of splashes and droplets, very weak evidence suggests that the remaining aerosol cloud itself may have a significant proportion of particles which are less than 1µm in diameter. Whether these small particles pose a significant infection control risk is a separate question as it is anticipated that smaller particles will have a decreased capacity to carry significantly high numbers of infectious viral particles.

There is very limited evidence to suggest that use of rubber dam may reduce bacterial air contamination by approximately 70% at 2 metres from the source. High volume suctioning appears to significantly reduce bacterial air contamination in close proximity to the procedure, however, its effect on aerosols is challenging to extract from the evidence base.

Appendix A: Search strategy

Embase/Medline database search

1. Influenza or SARS or MERS or COVID-19 or SARS-CoV-2 or respiratory or SARSCoV2.mp (1728721)

2. exp Disease Transmission, Infectious/ (318510)

3. dental* OR dentist* (892739)

4. 1 and 2 and 3 (134)

5. Limit to English language, Human, Humans (120)

6. Remove duplicates (100)

2nd Embase/Medline database search

1. exp/Infections (5820997)

2. exp/Infection control (166675)

3. dental or dentistry or "oral surgeon" or "oral surgery" or ultrasonic* or scaling or scalers or drill* or periodontal.mp (1232791)

4. aerosol* or bioaerosol* or airborne or ventilat* or air or environment* or area* or aerobiolog* or atmospher*.mp (6979015)

5. 1 and 2 and 3 and 4 (528)

6. limit to English Language, Human, Humans (454)

7. limit to 1990-Current (434)

8. De-duplicated (335)

Combined

335 + 100 = 435

De-duplicated = 416.

Grey literature searching

Google scholar with reference searching of relevant reviews resulting in extraction of an approximately 100 additional papers.

References

1. World Health Organization. Infection prevention and control of epidemic and pandemic prone acute respiratory infections in health care. 2014.
2. Jones RM and Brosseau LM. Aerosol transmission of infectious disease. Journal of Occupational and Environmental Medicine 2015; 57: 501-508.
3. Morawska L and Milton DK. It is Time to Address Airborne Transmission of COVID-19. Clinical Infectious Diseases 2020.
4. World Health Organization. Transmission of SARS-CoV-2: implications for infection prevention precautions. Scientific Brief. 2020.
5. Wölfel R, Corman VM, Guggemos W, Seilmaier M, Zange S, Müller MA, Niemeyer D, Jones TC, Vollmar P, Rothe C, Hoelscher M, Bleicker T, Brünink S, Schneider J, Ehmann R, Zwirglmaier K, Drosten C and Wendtner C. Virological assessment of hospitalized patients with COVID-2019. Nature 2020; 581: 465-469.
6. To KK-W, Tsang OT-Y, Yip CC-Y, Chan K-H, Wu T-C, Chan JM-C, Leung W-S, Chik TS-H, Choi CY-C, Kandamby DH, Lung DC, Tam AR, Poon RW-S, Fung AY-F, Hung IF-N, Cheng VC-C, Chan JF-W and Yuen K-Y. Consistent Detection of 2019 Novel Coronavirus in Saliva. Clinical Infectious Diseases 2020.
7. Li Y, Ren B, Peng X, Hu T, Li J, Gong T, Tang B, Xu X and Zhou X. Saliva is a non-negligible factor in the spread of COVID-19. Molecular Oral Microbiology 2020.
8. Public Health England, Public Health Scotland, Health Protection Scotland, Public Health Agency and Wales. PH. COVID-19: infection prevention and control guidance. 2020.
9. Scottish Dental Clinical Effectiveness Programme. Resuming General Dental Services Following COVID-19 Shutdown. A guide and implementation tools for general dental practice For Phases 2 and 3 of dental services remobilisation. 2020.
10. Office of Chief Dental Officer England and NHS. Standard operating procedure. Transition to recovery. A phased transition for dental practices towards the resumption of the full range of dental provision. 2020.
11. Faculty of General Dental Practice and College of General Dentistry. Implications of COVID-19 for the safe management of general dental practice A practical guide. Version 1.1. 2020.
12. Smith AJ, Lockhart DEA, McDonald E, Creanor S, Hurrell D and Bagg J. Design of dental surgeries in relation to instrument decontamination. Journal of Hospital Infection 2010; 76: 340-344.
13. Health Protection Scotland. Assessing the evidence base for medical procedures which create a higher risk of respiratory infection transmission from patient to healthcare worker. . 2020.

14. Pshenichnaya NY and Nenadskaya SA. Probable Crimean-Congo hemorrhagic fever virus transmission occurred after aerosol-generating medical procedures in Russia: nosocomial cluster. International Journal of Infectious Diseases 2015; 33: 120-122.
15. Tran K, Cimon K, Severn M, Pessoa-Silva CL and Conly J. Aerosol generating procedures and risk of transmission of acute respiratory infections to healthcare workers: a systematic review. PloS one 2012; 7: e35797-e35797.
16. Chung FF, Lin HL, Liu HE, Lien AS, Hsiao HF, Chou LT and Wan GH. Aerosol distribution during open suctioning and long-term surveillance of air quality in a respiratory care center within a medical center. Respiratory care 2015; 60: 30-37.
17. Davies KJ, Herbert AM, Westmoreland D and Bagg J. Seroepidemiological study of respiratory virus infections among dental surgeons. British dental journal 1994; 176: 262-265.
18. Reinthaler FF, Mascher F and Stunzner D. Serological examinations for antibodies against Legionella species in dental personnel. Journal of dental research 1988; 67: 942-943.
19. Laheij AMGA, Kistler JO, Belibasakis GN, Välimaa H, de Soet JJ and European Oral Microbiology W. Healthcare-associated viral and bacterial infections in dentistry. Journal of oral microbiology 2012; 4: 10.3402/jom.v3404i3400.17659.
20. Pankhurst C, Coulter W, Philpott-Howard J, Lee S, Warburton F and Challacombe S. Evaluation of the Potential Risk of Occupational Asthma in Dentists Exposed to Contaminated Dental Unit Waterlines. Primary dental care : journal of the Faculty of General Dental Practitioners (UK) 2005; 12: 53-59.
21. Leggat PA and Kedjarune U. Bacterial aerosols in the dental clinic: a review. International dental journal 2001; 51: 39-44.
22. Yamada H, Ishihama K, Yasuda K, Hasumi-Nakayama Y, Shimoji S and Furusawa K. Aerial dispersal of blood-contaminated aerosols during dental procedures. Quintessence international (Berlin, Germany : 1985) 2011; 42: 399-405.
23. Ishihama K, Koizumi H, Wada T, Iida S, Tanaka S, Yamanishi T, Enomoto A and Kogo M. Evidence of aerosolised floating blood mist during oral surgery. Journal of Hospital Infection 2009; 71: 359-364.
24. Rautemaa R, Nordberg A, Wuolijoki-Saaristo K and Meurman JH. Bacterial aerosols in dental practice - a potential hospital infection problem? Journal of Hospital Infection 2006; 64: 76-81.
25. Manarte-Monteiro P, Carvalho A, Pina C, Oliveira H and Manso MC. Air quality assessment during dental practice: Aerosols bacterial counts in an universitary clinic. Revista Portuguesa de Estomatologia, Medicina Dentaria e Cirurgia Maxilofacial 2013; 54: 2-7.

26. Pina-Vaz I, Pina-Vaz C, de Carvalho MF and A A. Evaluating spatter and aerosol contamination during opening of access cavities in endodontics. Rev Clin Pesq Odontol 2008; 4: 77-83.
27. Veena HR, Mahantesha S, Joseph PA, Patil SR and Patil SH. Dissemination of aerosol and splatter during ultrasonic scaling: A pilot study. Journal of Infection and Public Health 2015; 8: 260-265.
28. Allison JR, Currie CC, Edwards DC, Bowes C, Coulter J, Pickering K, Kozhevnikova E, Durham J, Nile CJ, Jakubovics N, Rostami N and Holliday R. Evaluating aerosol and splatter following dental procedures: addressing new challenges for oral healthcare and rehabilitation. bioRxiv 2020: 2020.2006.2025.154401.
29. Osorio R, Toledano M, Liebana J, Rosales JI and Lozano JA. Environmental microbial contamination. Pilot study in a dental surgery. International dental journal 1995; 45: 352-357.
30. Kedjarune U, Kukiattrakoon B, Yapong B, Chowanadisai S and Leggat P. Bacterial aerosols in the dental clinic: effect of time, position and type of treatment. International dental journal 2000; 50: 103-107.
31. Grenier D. Quantitative analysis of bacterial aerosols in two different dental clinic environments. Applied and Environmental Microbiology 1995; 61: 3165-3168.
32. Nogler M, Lass-Flörl C, Ogon M, Mayr E, Bach C and Wimmer C. Environmental and Body Contamination Through Aerosols Produced by High-Speed Cutters in Lumbar Spine Surgery. Spine 2001; 26: 2156-2159.
33. Nogler M, Lass-Flörl C, Wimmer C, Bach C, Kaufmann C and Ogon M. Aerosols produced by high-speed cutters in cervical spine surgery: extent of environmental contamination. European spine journal : official publication of the European Spine Society, the European Spinal Deformity Society, and the European Section of the Cervical Spine Research Society 2001; 10: 274-277.
34. Ferioli M, Cisternino C, Leo V, Pisani L, Palange P and Nava S. Protecting healthcare workers from SARS-CoV-2 infection: practical indications. Eur Respir Rev 2020; 29: 200068.
35. Ott M, Milazzo A, Liebau S, Jaki C, Schilling T, Krohn A and Heymer J. Exploration of strategies to reduce aerosol-spread during chest compressions: A simulation and cadaver model. Resuscitation 2020; 152: 192-198.
36. COVID-19 Dental Services Evidence Review (CoDER) Working Group, NHS Education for Scotland, Cochrane Oral Health, Health Services Research Unit, Scottish Dental Clinical Effectiveness Programme, University of Aberdeen, University of Dundee and The University of Manchester. Recommendations for the re-opening of dental services: a rapid review of international sources. 2020.
37. Bennett AM, Fulford MR, Walker JT, Bradshaw DJ, Martin MV and Marsh PD. Microbial aerosols in general dental practice. British dental journal 2000; 189: 664-667.

38. Miller RL. Characteristics of blood-containing aerosols generated by common powered dental instruments. American Industrial Hygiene Association Journal 1995; 56: 670-676.
39. Dutil S, Meriaux A, de Latremoille MC, Lazure L, Barbeau J and Duchaine C. Measurement of airborne bacteria and endotoxin generated during dental cleaning. Journal of occupational and environmental hygiene 2009; 6: 121-130.
40. Wells WF. On Air-borne Infection: Study II. Droplets and Droplet Nuclei. American Journal of Epidemiology 1934; 20: 611-618.
41. Sotiriou M, Ferguson SF, Davey M, Wolfson JM, Demokritou P, Lawrence J, Sax SN and Koutrakis P. Measurement of particle concentrations in a dental office. Environmental Monitoring and Assessment 2008; 137: 351-361.
42. Polednik B. Aerosol and bioaerosol particles in a dental office. Environmental Research 2014; 134: 405-409.
43. Ahrenholz SH, Brueck SE, de Perio MA and CDC. Environmental Assessment for the Presence of Influenza Viruses (2009 Pandemic Influenza A H1N1 and Seasonal) in Dental Practices – Ohio. . Health Hazard Evaluation Report 2011.
44. Micik RE, Miller RL, Mazzarella MA and Ryge GJJodr. Studies on dental aerobiology: I. Bacterial aerosols generated during dental procedures. 1969; 48: 49-56.
45. Peng X, Xu X, Li Y, Cheng L, Zhou X and Ren B. Transmission routes of 2019-nCoV and controls in dental practice. International journal of oral science 2020; 12: 9.
46. Giudice RL. The severe acute respiratory syndrome coronavirus-2 (Sars cov-2) in dentistry. management of biological risk in dental practice. International Journal of Environmental Research and Public Health 2020; 17 (9) (no pagination).
47. Ather A, Patel B, Ruparel NB, Diogenes A and Hargreaves KM. Coronavirus Disease 19 (COVID-19): Implications for Clinical Dental Care. Journal of endodontics 2020; 46: 584-595.
48. Fallahi HR, Keyhan SO, Zandian D, Kim SG and Cheshmi B. Being a front-line dentist during the Covid-19 pandemic: a literature review. Maxillofacial and Plastic Reconstructive Surgery 2020; 42 (1) (no pagination).
49. Alharbi A, Alharbi S and Alqaidi S. Guidelines for dental care provision during the COVID-19 pandemic. Saudi Dental Journal 2020; 32: 181-186.
50. Samaranayake LP. Oral and maxillofacial surgery and dentistry after severe acute respiratory syndrome. Asian Journal of Oral and Maxillofacial Surgery 2003; 15: 77-79.
51. Samaranayake LP and Peiris M. Severe acute respiratory syndrome and dentistry: A retrospective view. Journal of the American Dental Association 2004; 135: 1292-1302.
52. Sukumaran A and Patil S. The MERS-CoV outbreak: challenges facing the dental profession. Journal of Contemporary Dental Practice [Electronic Resource] 2014; 15: i-ii.

53. Al-Sehaibany FS. Middle East respiratory syndrome in children. Dental considerations. Saudi Medical Journal 2017; 38: 339-343.
54. Samaranayake LP, Reid J and Evans D. The efficacy of rubber dam isolation in reducing atmospheric bacterial contamination. ASDC journal of dentistry for children 1989; 56: 442-444.
55. Cochran MA, Miller CH and Sheldrake MA. The efficacy of the rubber dam as a barrier to the spread of microorganisms during dental treatment. Journal of the American Dental Association (1939) 1989; 119: 141-144.
56. Tag El Din AM and Ghoname NAH. Efficacy of rubber dam isolation as an infection control procedure in paediatric dentistry. Eastern Mediterranean Health Journal, 1997; 3: 530-539.
57. Dahlke WO, Cottam MR, Herring MC, Leavitt JM, Ditmyer MM and Walker RS. Evaluation of the spatter-reduction effectiveness of two dry-field isolation techniques. Journal of the American Dental Association 2012; 143: 1199-1204.
58. Al-Amad SH, Awad MA, Edher FM, Shahramian K and Omran TA. The effect of rubber dam on atmospheric bacterial aerosols during restorative dentistry. Journal of Infection and Public Health 2017; 10: 195-200.
59. Harrel SK and Molinari J. Aerosols and splatter in dentistry: A brief review of the literature and infection control implications. Journal of the American Dental Association 2004; 135: 429-437.
60. Dunbar L. COVID-19 and suction. Dental Nursing 2020; 16: 252-253.
61. Sawhney A, Venugopal S, Girish Babu RJ, Garg A, Mathew M, Yadav M, Gupta B and Tripathi S. Aerosols how dangerous they are in clinical practice. Journal of Clinical and Diagnostic Research 2015; 9: 52-57.
62. Desarda H, Gurav A, Dharmadhikari C, Shete A and Gaikwad S. Efficacy of High-volume Evacuator in Aerosol Reduction: Truth or Myth? A Clinical and Microbiological Study. Journal of Dental Research Dental Clinics Dental Prospects 2014; 8: 176-179.
63. Klyn SL, Cummings DE, Richardson BW and Davis RD. Reduction of bacteria-containing spray produced during ultrasonic scaling. General dentistry 2001; 49: 648-652.
64. Harrel SK, Barnes JB and Rivera-Hidalgo F. Reduction of aerosols produced by ultrasonic scalers. Journal of periodontology 1996; 67: 28-32.
65. Marui VC, Souto MLS, Rovai ES, Romito GA, Chambrone L and CM. P. Efficacy of pre-procedural mouthrinses in the reduction of microorganisms in aerosol: a systematic review. J Am Dent Assoc 2019; 150: 1015-1026.
66. Parhar HS, Tasche K, Brody RM, Weinstein GS, O'Malley BW, Shanti RM and Newman JG. Topical preparations to reduce SARS-CoV-2 aerosolization in head and neck mucosal surgery. Head and Neck 2020; 42: 1268-1272.

67. Bidra AS, Pelletier JS, Westover JB, Frank S, Brown SM and Tessema B. Rapid In-Vitro Inactivation of Severe Acute Respiratory Syndrome Coronavirus 2 (SARS-CoV-2) Using Povidone-Iodine Oral Antiseptic Rinse. Journal of prosthodontics : official journal of the American College of Prosthodontists 2020; 08.
68. Szymanska J. Dental bioaerosol as an occupational hazard in a dentist's workplace. Annals of Agricultural and Environmental Medicine 2007; 14: 203-207.
69. The Chartered Institution of Building Services Engineers. Coronavirus, SARS-CoV-2, COVID-19 and HVAC Systems,. 2020.
70. Health Facilities Scotland and NHS National Services Scotland. Scottish Health Planning Note 36 Part 2: NHS Dental Premises in Scotland. 2006.
71. World Health Organization, Atkinson J, Chartier Y, Pessoa-Silva CL, Jensen P, Li Y and Seto WH. Natural ventilation for infection control in health-care settings. 2009.
72. Coia JE, Ritchie L, Adisesh A, Makison Booth C, Bradley C, Bunyan D, Carson G, Fry C, Hoffman P, Jenkins D, Phin N, Taylor B, Nguyen-Van-Tam JS and Zuckerman M. Guidance on the use of respiratory and facial protection equipment. Journal of Hospital Infection 2013; 85: 170-182.
73. Hallier C, Williams DW, Potts AJC and Lewis MAO. A pilot study of bioaerosol reduction using an air cleaning system during dental procedures. British Dental Journal 2010; 209: E14.
74. Narayana TV, Mohanty L, Sreenath G and P. V. Role of preprocedural rinse and high volume evacuator in reducing bacterial contamination in bioaerosols. J Oral Maxillofac Pathol 2016; 20: 59-65.

Appendix 4 – COVID-19: Frequently Asked Questions (FAQs) for Dentistry

This FAQ document has been developed to support Infection Prevention and Control and Clinical Teams during the COVID-19 Pandemic. Further information can be found in the UK COVID-19 IPC Guidance and National Infection Prevention and Control Manual. These FAQs are intended to clarify and support this guidance and have been compiled in response to queries received by the Scottish National ARHAI Team and Health Facilities Scotland. In particular support was requested for remobilisation of the dental practice sector following a reduction in service as a result of the COVID-19 pandemic. The FAQ are not intended to instruct colleagues how to operate dental practices but to address some common concerns and provide evidence based guidance/expert opinion to allow safe remobilisation of services. They are not intended to substitute for clinical judgement or standard operating procedures but may assist in informing those.

We understand that healthcare staff are faced with various guidance and publications from multiple sources. A recent letter issued by Chief Nursing Officer, Chief Medical Officer and National Clinical Director reinforces the need for healthcare staff to follow the guidance issued by Health Protection Scotland (HPS), Public Health England (PHE) and Scottish Government Health and Social Care Directorate (SGHSCD) in relation to Personal Protective Equipment (PPE) and Aerosol Generating Procedures (AGPs) which has national standing. The letter can be found at the following link;

https://www.gov.scot/publications/coronavirus-covid-19-letter-on-aerosol-generating-procedures-agp/

It should be noted that other devolved administration healthcare workers should follow their own national guidelines.

This FAQ attempts to address considerations to be taken into account both when working with suspected or confirmed cases of COVID-19 and when carrying out dental treatment on patients where COVID-19 is not suspected (and patients may have been tested and/or undergone a period of isolation before treatment) but COVID-19 is still widespread in the local community. This document will be updated as the evidence base develops and if there are any changes to published guidance. Please ensure that you are reading the most recent version. The evidence base is limited and where sufficient evidence for a definitive answer is not available these answers are necessarily based on the consensus of expert opinion. Additionally, there inevitably needs to be compromise between risk minimisation and practicability: The risks of transmission between individuals are mitigated but cannot be removed altogether.

How is COVID-19 transmitted?

Current evidence suggests that transmission of SARS-CoV-2 occurs primarily between people through direct, indirect, or close contact with infected people through infected

secretions such as saliva and respiratory secretions, or through their respiratory droplets, which are expelled when an infected person coughs, sneezes, talks or sings.

Airborne transmission of the virus can occur in health care settings where specific medical procedures, called aerosol generating procedures (AGP's), generate very small droplets called aerosols. Some outbreak reports related to indoor crowded spaces have suggested the possibility of aerosol transmission, combined with droplet transmission, for example, during choir practice, in restaurants or in fitness classes.

Respiratory droplets from infected individuals can also land on objects, creating fomites (contaminated surfaces). As environmental contamination has been documented by many reports, it is likely that people can also be infected by touching these surfaces and touching their eyes, nose or mouth before cleaning their hands.

Based on what we currently know, transmission of COVID-19 is primarily occurring from people when they have symptoms, and can also occur just before they develop symptoms, when they are in close proximity to others for prolonged periods of time. While someone who never develops symptoms can also pass the virus to others, it is still not clear to what extent this occurs and more research is needed in this area. (WHO 2020)

Interrupting transmission of COVID-19 requires contact and droplet precautions to be applied. Airborne precautions must also be applied when undertaking and following an aerosol-generating procedure (AGP) or when working in a 'high risk' setting where AGPs are carried out routinely.

Time is required after an AGP is performed to allow the aerosols to be removed/diluted. This is referred to as the Post AGP Fallow Time (PAGPFT) and is a function of the room ventilation air change rate.

How should patients present for dental treatment?

Adopt a hierarchy of controls approach as follows;

4. For all symptomatic patients and those within 14 days' post isolation, treatment should be deferred unless a dental emergency
5. All other patients for whom an AGP is being undertaking follow respiratory precautions and other PPE requirements as per current protocols prescribed in 4 Nations Public Health guidance.
6. For patients not requiring an AGP follow respiratory precautions and other PPE requirements as per current protocols prescribed in 4 Nations Public Health guidance.

However, no patient should be refused treatment or discriminated against whatever their COVID19 status if they have a dental emergency

How should patients be managed in the dental practice?

With some exceptions, as described below, patients should be managed as they would have been in the period before the COVID-19 pandemic. 'Social distancing' should be observed in reception and waiting areas, with a minimum distance of two metres maintained between patients. Patients should be encouraged to arrive at their exact appointment time to avoid an unnecessary stay in the waiting area. Patients should be required to wear a face covering when in these areas.

What infection prevention and control precautions need to be taken with patients presenting for dental treatment?

As with all patients, standard infection prevention and control precautions (SICPs) should be used at all times. Particular attention should be paid to hand hygiene before any patient contact.

In addition, patients need to be protected from the potential risk of infection from staff with unrecognised COVID-19 infection. All staff within two metres of a low risk patient should therefore wear a fluid-resistant surgical face mask to BS EN 14683.

Environmental decontamination: cleaning after each patient in this category should return to the practice in place before the COVID-19 pandemic

Fallow time: there is no requirement for any fallow time if there is no AGP undertaken on a patient.

Does the dental practice ventilation need to be altered in any way?

The first stage is to obtain some in-sight into the air changes that are happening in all the rooms of the dental practice but especially in the dental surgery where AGP's are occurring. The ventilation system should be set to provide the maximum amount of fresh air and the maximum number of air changes it is able to provide. Health Planning notes (such as SHPN 36 part 2 2006) recommend a minimum of 10 ACH for the dental surgery.

If there is no mechanical or natural (open window of suitable size) ventilation AGPs must not be undertaken in that room, as this will be in breach of both HASAW Act and maintain high concentrations of aerosolised upper respiratory tract secretions generated during the AGP.

For surgeries that have natural ventilation only and no immediate access to room data on ACH's. AGPs cannot be undertaken in these rooms until suitable ventilation rates are confirmed and a PAGPFT can be calculated. Depending on air circulation in treatment rooms, it is expected that there will be some redistribution of small amounts of aerosol through closed doors into corridors and patient waiting/reception areas. The risk to patients and staff from these small volumes of aerosol out with the treatment room is estimated to be very low. This advice should be viewed as a short term (weeks) solution to assist with

the provision of clinical dental services with a detailed plan to acquire a more detailed assessment of the practice ventilation facilities.

For surgeries that have mechanical ventilation and no immediate access to room data on ACH's AGPs cannot be undertaken in these rooms until suitable ventilation rates are confirmed and a PAGPFT can be calculated. This advice should be viewed as a short term (weeks) solution to assist with the provision of clinical dental services with a detailed plan to acquire a more detailed assessment of the practice ventilation facilities.

If you are unsure of the air changes and ventilation systems occurring in your dental practice, then you must seek advice.

There may be benefits in some cases in supplementing the ventilation to reduce the post AGP fallow time. Specialist advice can be procured to establish a feasible solution on a case-by-case basis.

Does the dental practice need to be altered or modified in any other way?

The priorities are to ensure that facilities are compliant with HASAW Act for the safety and comfort of all staff and patients and reduce the infection hazards from aerosols liberated during AGP's. It would be prudent to check that ventilation systems do not exhaust from treatment rooms into other areas of the practice, such as, waiting or staff rooms.

In line with standard best practice to facilitate ease of cleaning, the amount of equipment and material in the area should be kept to a minimum. Surfaces should be clutter free and items that may be needed should be stored away in closed cupboards or drawers in the surgery or ideally adjacent to the surgery to facilitate prompt access when they are required. In addition, alterations to facilitate social distancing, protective screening and one way systems may be required.

There may be benefits in some cases in supplementing the ventilation to reduce the post AGP fallow time. Specialist advice can be procured to establish a feasible solution on a case-by-case basis.

Is there a risk to patients or staff in waiting rooms, staff rooms or corridors outside the surgery during or after AGPs?

Dental surgeries should be operated with doors closed. Depending on air circulation patterns and air pressure in treatment rooms, it is expected that there may be some redistribution of small amounts of aerosol through doorframe gaps into corridors and patient waiting/reception areas. The risk to patients and staff from these very small volumes of aerosol diluted with the air in the areas out with the treatment room is estimated to be very low.

What staff need to be in the dental room?

Only staff essential to treatment should be present in the room particularly if AGPs are being undertaken.

Are there any mitigating techniques which may reduce the PAGPFT?

Weak evidence exists that the use of high volume suctioning and/or rubber dams can reduce the volume of droplet/aerosols which are released into the room.

What cleaning is required after the procedure?

To minimise the risk from the environment, environmental decontamination should be undertaken after each patient has left.

The patient or staff are not required to sit in the surgery during the PAGPFT. Environmental surface decontamination should be systematic and documented to include all contact surfaces, including the dental chair. Cleaning and disinfectant chemicals and equipment that were previously used to clean the dental surgery between patients are sufficient.

Environmental decontamination should be thorough and include all contact surfaces, including the dental chair. Neutral detergent followed by a disinfectant containing 1000 parts per million (ppm) available chlorine (av cl) (or a combined detergent/disinfectant (1000 ppm av cl)) should be used following treatment of a patient in the amber or red pathway. Alternatively, consideration may be given to using 70% isopropyl alcohol for small surfaces. However, since alcohol is flammable its use as a surface disinfectant should be limited to small surface-areas and used in well-ventilated spaces only. Prolonged and repeated use of alcohol as a disinfectant can also cause discoloration, swelling, hardening and cracking of rubber and certain plastics.

As the droplet settling time is ten minutes: cleaning can commence within the area after ten minutes of the AGP completion, however the level of PPE required to undertake this depends on the risk assessment and calculated post AGP fallow time.

Manufacturer instructions and COSHH requirements should be followed with regard to the preparation of disinfectants and contact time required for effective disinfection with consideration given to the area where this product is reconstituted which should be well ventilated. Appropriate PPE should be worn when handling disinfectants.

Non-invasive patient care equipment should be single use disposable where possible. Re-useable (non-invasive) equipment must be disinfected after use using the products described above for environmental cleaning and in accordance with equipment manufacturers instructions.

Mop heads must be either single use disposable or reusable and laundered between uses as per manufacturer’s instructions and National guidance.

How should instruments be transported and decontaminated after the procedure?

Instruments and other devices should be decontaminated in the normal manner in accordance with manufacturers' advice. Normal procedures should be designed to minimise the risk to staff from potentially contaminated instruments, so additional precautions should not be required.

What personal protective equipment (PPE) should be worn?

All staff in the dental practice should wear a minimum of a fluid resistant surgical mask for their entire shift, in line with the Chief Medical Officer's letter of 23 June 2020.

In addition, staff who may come within two metres of a patient at any time or cleaning equipment or furniture in the dental practice should also wear additional PPE as described for droplet precautions: I.e. disposable plastic apron, disposable gloves, and face/eye protection. Masks and face/eye protection may be worn on a sessional basis. Masks should be changed when they become wet, soiled or visibly contaminated, or if they are removed for any reason, for example when eating or drinking.

Staff who are within 2m of an aerosol generating procedure (AGP) (see below) should wear additional appropriate PPE: i.e. disposable fluid-repellent gown or coverall, disposable gloves, filtering face piece (FFP) respirator (instead of, **not** in addition to, the fluid resistant surgical mask) and face/eye protection. Staff must wear the FFP3 mask they have been fit tested for and fit check must be carried out each time a mask is worn. FFP respirators and face/eye protection may be worn on a sessional basis. FFP respirators should be changed when they become wet or soiled, or if they are removed for any reason. If the FFP respirator is valved, or not fluid-resistant, full face protection that covers the mouth as well as the eyes must be worn.

When, exactly, should AGP PPE be worn?

PPE as described above for staff in close proximity to an AGP should be worn by:

- Anyone carrying out or assisting with an AGP. The full list of AGPs is available in the relevant guidance document. AGPs typically carried out in a dental practice include
    - Dental procedures using high speed devices such as ultrasonic scalers and high speed drills or intra-oral use of compressed air as in triple syringe.
- Anyone else in the dental surgery who is, or is likely to come, within two metres of the AGP being carried out should wear an FFP3 respirator.

Are special donning and doffing areas required putting on and taking off PPE

No. However, while a special area is not required, facilities for hand washing and disposal of used PPE should be available in the vicinity of the area chosen and guidance on PPE donning, doffing and hand hygiene should be followed.

How long should a surgery be left for after an AGP?

The post AGP fallow time and thus the length of time for those requiring to wear FFP3 respirators following an AGP is dependent on the air changes. In smaller rooms and rooms with fewer air changes the effects of dilution and ventilation will be correspondingly lower; for example, in room with 2 air changes per hour (ACH) and an AGP of 10 minutes (with no mitigation), a minimum of two hours and twenty-seven minutes is considered pragmatic. This may mean that in some circumstances, for example a room with limited ventilation and little air changes, the practical option is for all staff to use FFP3 respirators at all times within the dental surgery. It would also potentially lead to long PAGPFTs unless mitigating or supplementary measures were put in place. No patients should be allowed in the room during the PAGPFT.

Is there a minimum post AGP fallow time?

The appropriate post AGP fallow time should be determined from the ventilation rate in the room and any additional mitigations. The fallow time should not be reduced below 10 minutes regardless of ventilation, as this is the time taken for larger droplets to settle out onto surfaces.

Are there mitigations that can be introduced to reduce the post AGP fallow time?

The amount of aerosol that is generated can be reduced by using high volume suction and dental dam with low volume suction. It is estimated that these actions could reduce the amount of aerosol generated by over 90%.

Addition of recirculating air cleaning devices could enhance the effective air change rate (but will not provide additional fresh air). The impact of such devices will depend on the specific device air flow rate and the size of the room. Devices should be correctly sized and the impacts on the room air flows considered. Recirculating air cleaning devices based on HEPA filter systems or UV-C are likely to be effective. Other technologies should be approached with caution as there is little evidence for effectiveness in practice.

How does practice in a multi chair clinic differ?

In multi-chair environments there may be logistical challenges when trying to control aerosols and link to treatment sessions that have different durations and complexities. Therefore, the most viable clinical option is a self-contained dental treatment units (pods).

These should conform to the following principles;

7. Obtain baseline data on room air changes, flow patterns and ventilation in/outputs, use of filters (size & maintenance record), options for natural ventilation. If there is no mechanical or natural (open window of suitable size) ventilation AGPs must not be undertaken in that room, as this will be in breach of both HASAW Act and maintain high concentrations of aerosolised upper respiratory tract secretions generated during the AGP.
8. Obtain location of nearby patient/staff areas that may be impacted directly/indirectly by AGP's and ventilation systems
9. There should be a minimum of 2 meters protected zone to contain the splatter and droplet between each unit. This protected zone can further be sub-divided into frequently contacted (hands) sites, that are decontaminated between patient treatments. The whole of the protected zone should be cleaned after a treatment session (e.g. at the end of the morning clinics or afternoon/evening clinics).
10. In addition to separation of the dental chairs (to a minimum of 2.0 metres) there should also be a physical barrier using for example Perspex screen (or other suitable materials) to contain splatter and droplets to the immediate vicinity of the dental chair. It is suggested that a minimum of 2.0m height above the AGP source be used as a guide for pod construction around the dental chair.
11. There is a need to measure the air change rate in the POS to calculate the PAGPFT.
12. There is a need to measure and analyse the air movement patterns in large clinic rooms as part of the building estates and facilities programme, ventilation properties of each room should be available for inspection.

Appendix 5 – Infographics (draft only)

The aim of these infographics is to aid communications and inform risk reduction measures.

It is intended that these are used to inform dental healthcare workers, patients and the general public.

Figure 1a
Infographic highlighting the "aerosol" contamination zones in a dental environment

Side view

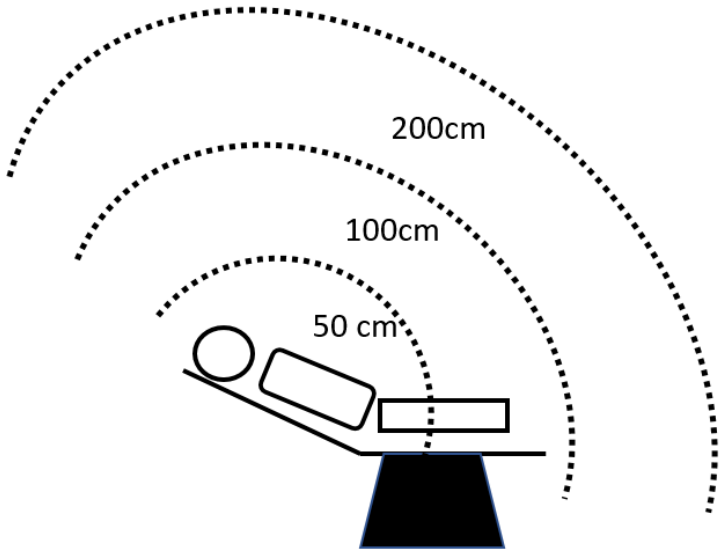

Figure 2 Infographic highlighting the “aerosol” contamination zones in a dental environment
Plan view

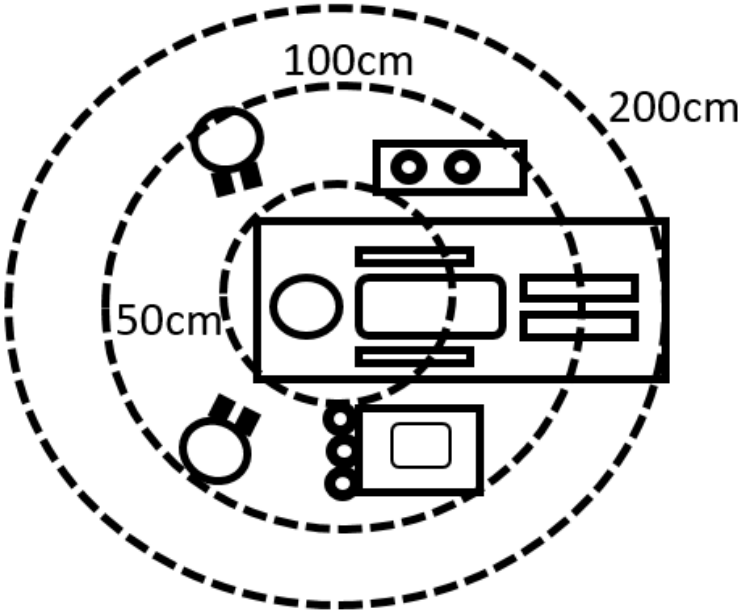

Figure 3 illustration of aerosol particle size distribution and fall out rate

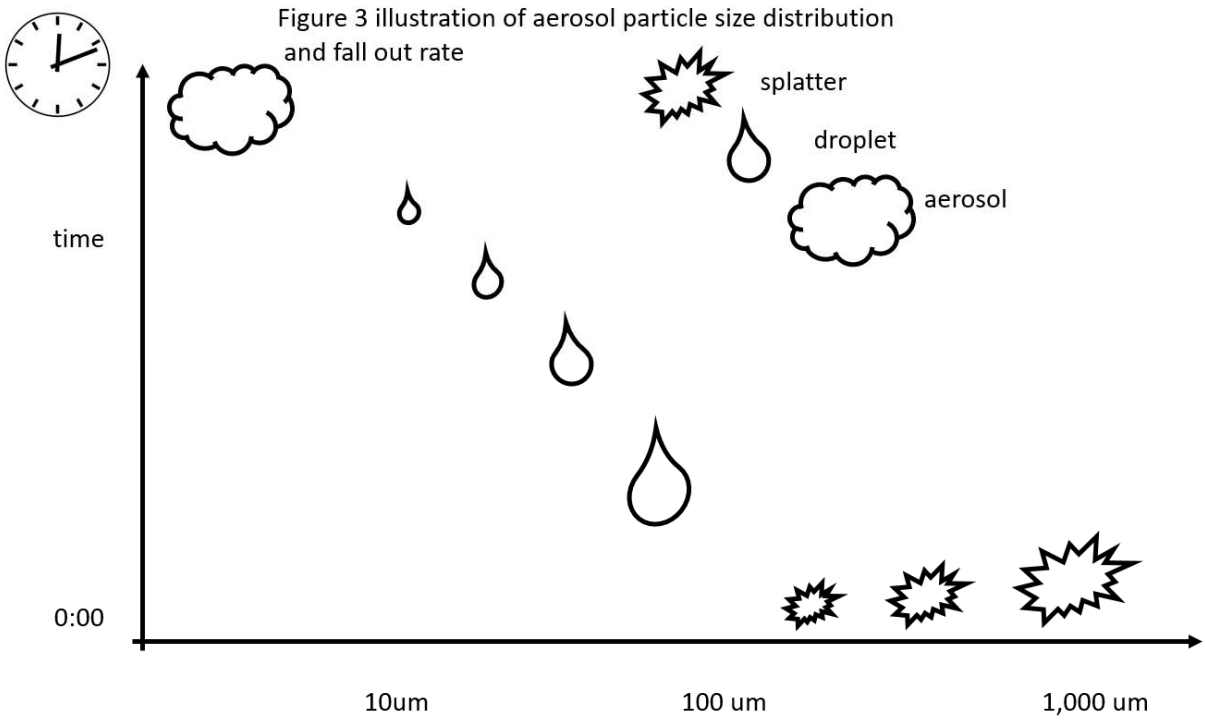

Figure 4a illustration of aerosol particle size ranges and cross-infection routes during a dental AGP

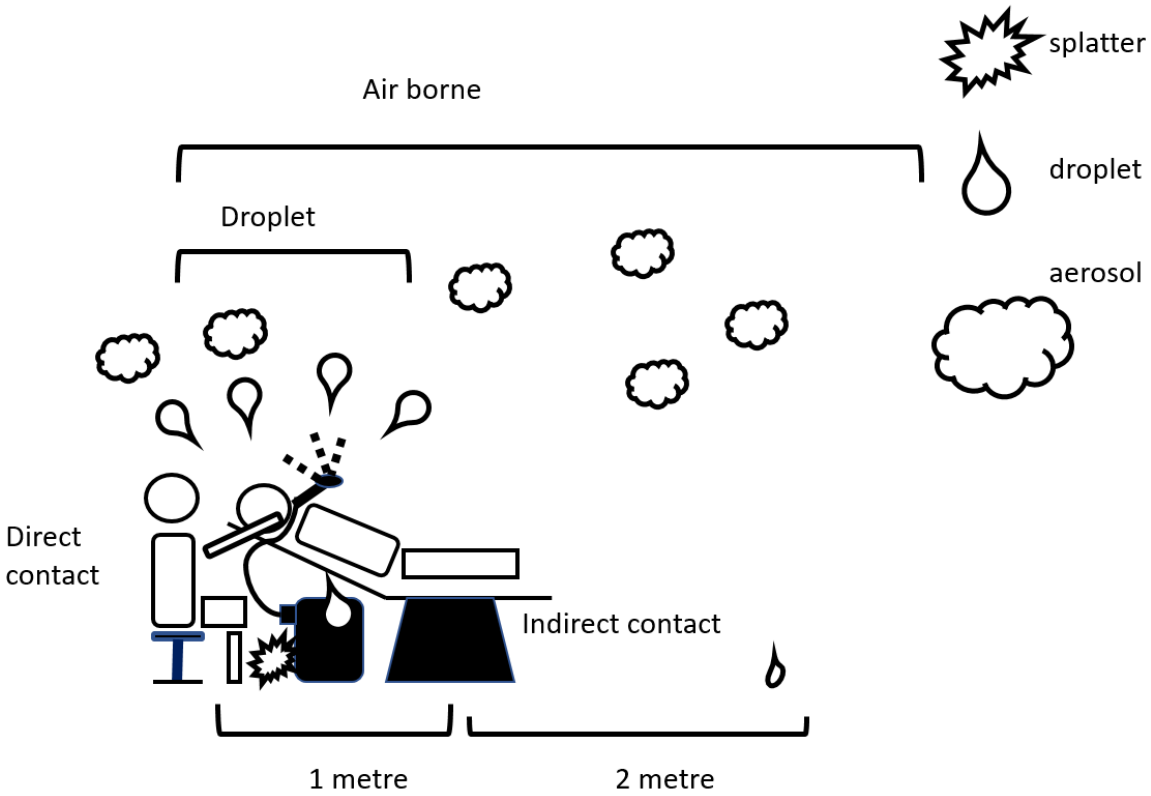

Figure 4b illustration of aerosol particle size formation and distribution during a dental AGP

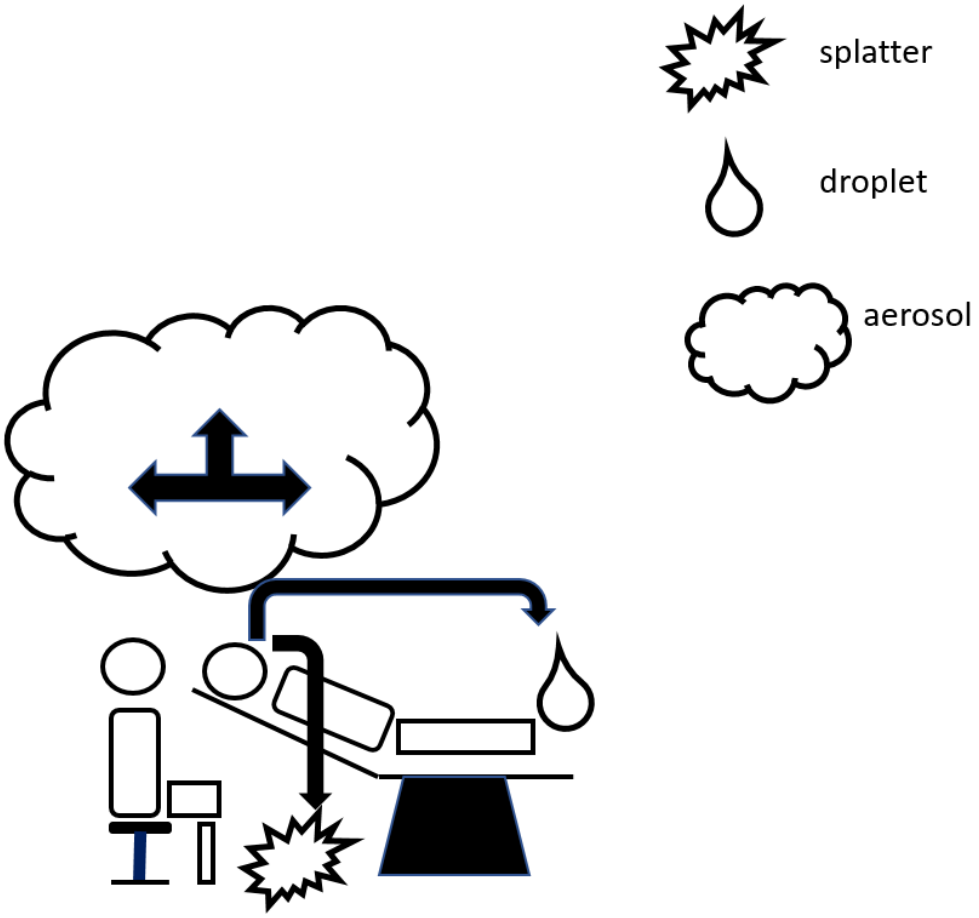

Figure 4 illustration of aerosol particle size formation and distribution during a dental AGP – plan view

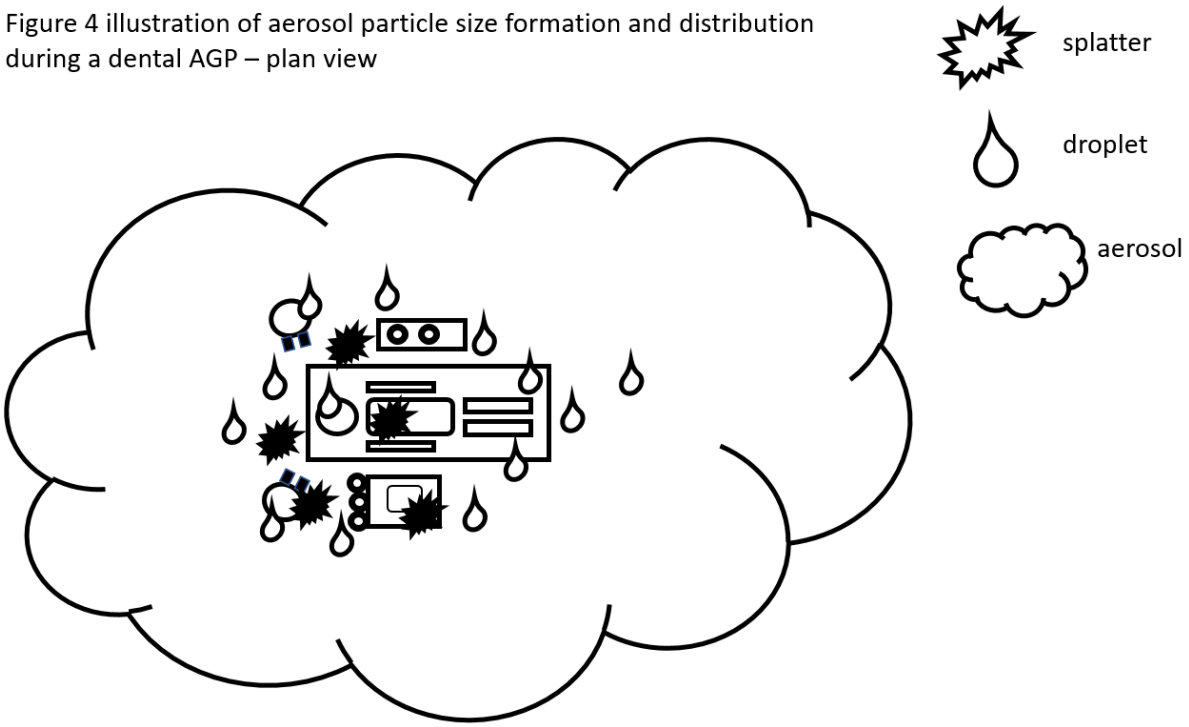

Figure 5a illustration of viral loading in aerosol fractions – most (90%) is found in the droplet & splatter. Demonstrating highest infection risk with droplet & splatter *(& direct contact & indirect contact spread)*

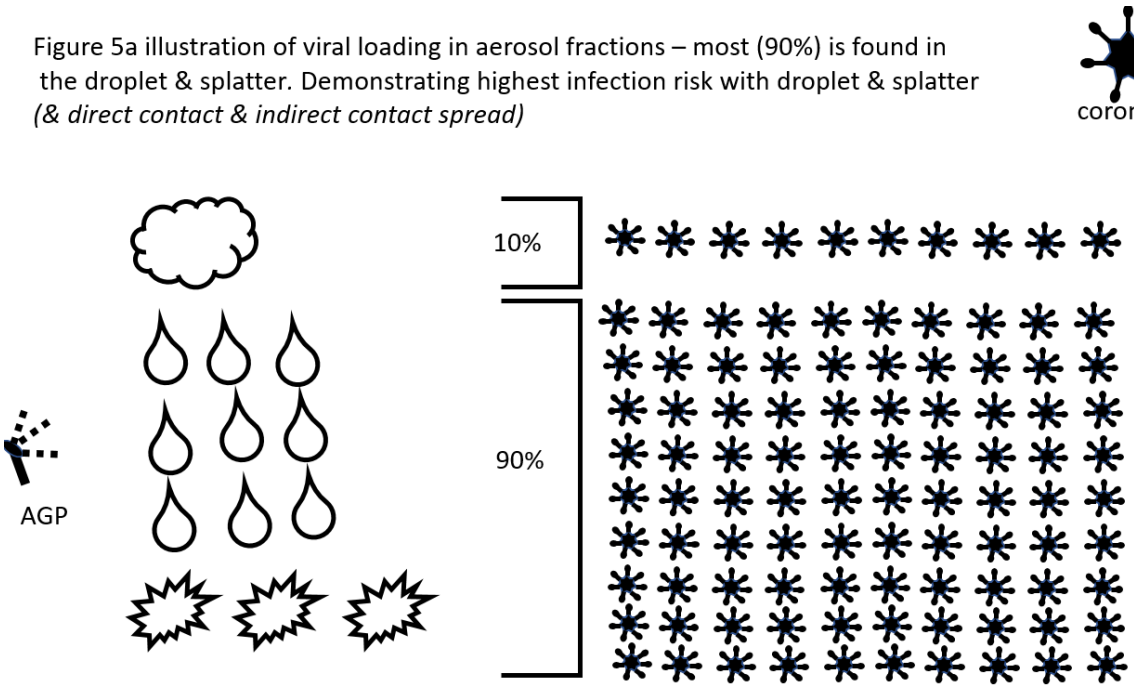

Figure 6 illustration of role of ventilation in diluting aerosol generated during a dental AGP

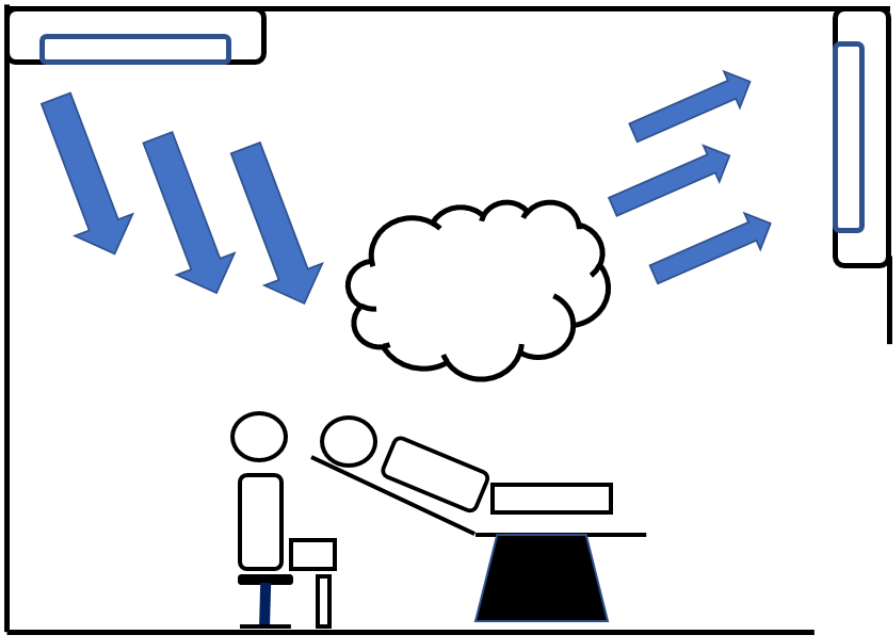

Appendix 6 - SLWG membership

Member	Health Board/ Trust/Organisation/Group
Ian Storrar (Co-Chair)	Health Facilities Scotland
Annette Rankin (Co-Chair)	Health Protection Scotland/ARHAI
Gavin McLellan	CDO Office
Paul Cushley	NSS Director of Dentistry
Mike Weinbren	Health Protection Scotland/ARHAI
Andrew Smith	Glasgow University and NHS Greater Glasgow and Clyde
Catherine Noakes	Leeds University
Peter Hoffman	Public Health England
Melanie Wilson	Cardiff and Vale University Health Board
David McNeil	Health Facilities Scotland
Lorna Gordon	National ARHAI Scotland
Kirsty McDaid	National ARHAI Scotland
Adrian Eggleton	NHS Estates
Mike Ralph	NHS England and NHS Improvement
Simon Russell	NHS Wales Shared Services Partnership
Mark Gapper	NHS Wales Shared Services Partnership
Dylan Evans	NHS Wales Shared Services Partnership
David Wilson	DoH NI Safety Strategy Unit
David McCabrey	DoH NI Safety Strategy Unit
Charles Afuakwah	NSS, Dental Advisor
Laura Allison	Health Facilities Scotland

Contributing partners